42V, 15A Synchronous Step-Down Silent Switcher 2

FEATURES

- **Silent Switcher®2 Architecture**
  - **Ultralow EMI Emissions on Any PCB**
  - **Eliminates PCB Layout Sensitivity**
  - **Internal Bypass Capacitors Reduce Radiated EMI**
  - **Optional Spread Spectrum Modulation**
- **High Efficiency at High Frequency**
  - **Up to 95.5% Efficiency at 1MHz, $12V_{IN}$ to $5V_{OUT}$**
  - **Up to 93% Efficiency at 2MHz, $12V_{IN}$ to $5V_{OUT}$**
- **Wide Input Voltage Range: 3V to 42V**
- **15A Output Current**
- Low Quiescent Current Burst Mode® Operation
  - 100µA I_Q Regulating $12V_{IN}$ to $5V_{OUT}$
  - Output Ripple < $10mV_{P-P}$
- External Compensation: Fast Transient Response and Current Sharing
- Fast Minimum Switch On-Time: 25ns
- Low Dropout Under All Conditions: 35mV at 1A
- Forced Continuous Mode
- Adjustable and Synchronizable: 200kHz to 2.2MHz
- Output Soft-Start and Power Good
- Safely Tolerates High Reverse Current
- Small 36-Lead 7mm × 4mm LQFN Package
- AEC-Q100 Qualification in Progress

APPLICATIONS

- Automotive and Industrial Supplies
- General Purpose Step-Down

DESCRIPTION

The LT®8648S synchronous step-down regulator features second generation Silent Switcher architecture designed to minimize EMI emissions while delivering high efficiency at high switching frequencies. This includes the integration of input and boost capacitors to optimize all the fast current loops inside and make it easy to achieve advertised EMI performance by reducing layout sensitivity. This performance makes the LT8648S ideal for noise sensitive applications and environments.

The fast, clean, low overshoot switching edges enable high efficiency operation even at high switching frequencies, leading to a small overall solution size. Peak current mode control with a 25ns minimum on-time allows high step down ratios even at high switching frequencies. External compensation via the V_C pin allows for fast transient response at high switching frequencies. The V_C pin also enables current sharing and a CLKOUT pin enables synchronizing other regulators to the LT8648S.

Burst Mode operation enables low standby current consumption, forced continuous mode can control frequency harmonics across the entire output load range, or spread spectrum operation can further reduce EMI emissions. Soft-start and tracking functionality is accessed via the SS pin, and an accurate input voltage UVLO threshold can be set using the EN/UV pin.

All registered trademarks and trademarks are the property of their respective owners. Protected by U.S. patents, including 8823345.

TYPICAL APPLICATION

5V 15A Step-Down Converter

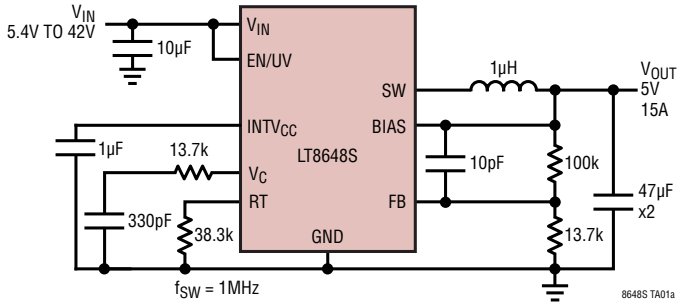

$12V_{IN}$ to $5V_{OUT}$ Efficiency

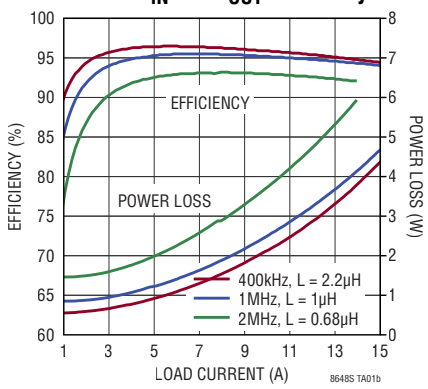

ABSOLUTE MAXIMUM RATINGS

(Note 1)

V_{IN}, EN/UV, PG.....42V
BIAS.....25V
FB, SS 4V
SYNC/MODE Voltage 6V
Operating Junction Temperature Range (Note 2)
LT8648SE ..... –40°C to 125°C
LT8648SJ ..... –40°C to 150°C
LT8648SH..... –40°C to 150°C
Storage Temperature Range ..... –40°C to 150°C
Maximum Reflow (Package Body) Temperature..... 260°C

PIN CONFIGURATION

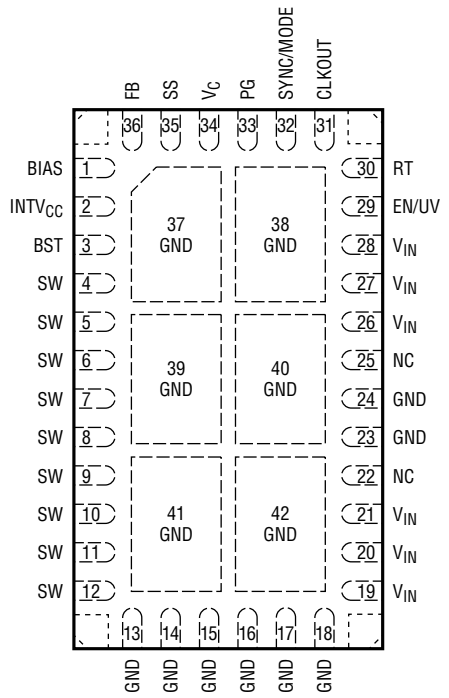

LQFN PACKAGE
36-LEAD (7mm × 4mm × 0.94mm)

JEDEC BOARD: θ_{JA} = 26°C/W, Ψ_{JT} = 0.3°C/W, θ_{JCTOP} = 9.1°C/W, θ_{JCBOT} = 1.9°C/W (Note 3)
DEMO BOARD: θ_{JA} = 15°C/W
EXPOSED PAD (PINS 37-42) ARE GND, SHOULD BE SOLDERED TO PCB

ORDER INFORMATION

PART NUMBER	PART MARKING*	FINISH CODE	PAD FINISH	PACKAGE TYPE**	MSL RATING	TEMPERATURE RANGE
LT8648SEV#PBF	8648S	e4	Au (RoHS)	LQFN (Laminate Package with QFN Footprint)	3	–40°C to 125°C
LT8648SJV#PBF						–40°C to 150°C
LT8648SHV#PBF						
AUTOMOTIVE PARTS* **						
LT8648SEV#WPBF	8648S	e4	Au (RoHS)	LQFN (Laminate Package with QFN Footprint)	3	–40°C to 125°C
LT8648SJV#WPBF						–40°C to 150°C
LT8648SHV#WPBF						

- Contact the factory for parts specified with wider operating temperature ranges. *Pad or ball finish code is per IPC/JEDEC J-STD-609.
- Recommended LGA and BGA PCB Assembly and Manufacturing Procedures
- LGA and BGA Package and Tray Drawings

Parts ending with PBF are RoHS and WEEE compliant. **The LT8648S package has the same dimensions as a standard 7mm × 4mm QFN package.

***Versions of this part are available with controlled manufacturing to support the quality and reliability requirements of automotive applications. These models are designated with a #W suffix. Only the automotive grade products shown are available for use in automotive applications. Contact your local Analog Devices account representative for specific product ordering information and to obtain the specific Automotive Reliability reports for these models.

ELECTRICAL CHARACTERISTICS

The ● denotes the specifications which apply over the full operating temperature range, otherwise specifications are at T_A = 25°C.

PARAMETER	CONDITIONS		MIN	TYP	MAX	UNITS
Minimum Input Voltage	f_{SW} = 400kHz f_{SW} = 2MHz	 ●		2.45 2.75	2.6 3.0	V V
V_{IN} Quiescent Current in Shutdown	$V_{EN/UV}$ = 0V, V_{IN} = 12V			6	9	µA
V_{IN} Quiescent Current in Sleep	$V_{EN/UV}$ = 2V, V_{FB} > 0.6V, V_{SYNC} = 0V, V_{BIAS} = 0V	 ●		140 140	195 255	µA µA
	$V_{EN/UV}$ = 2V, V_{FB} > 0.6V, V_{SYNC} = 0V, V_{BIAS} = 5V			20	29	µA
BIAS Quiescent Current in Sleep	$V_{EN/UV}$ = 2V, V_{FB} > 0.6V, V_{SYNC} = 0V, V_{BIAS} = 5V			100	145	µA
Feedback Reference Voltage	V_{IN} = 12V V_{IN} = 12V	 ●	0.598 0.594	0.6 0.6	0.602 0.604	V V
Feedback Voltage Line Regulation	V_{IN} = 4.0V to 40V, V_C = 1.25	●		0.001	0.025	%/V
Feedback Pin Input Current	V_{FB} = 0.6V		–20		20	nA
Error Amp Transconductance	V_C = 1.25V		1.1	1.45	1.8	mS
Error Amp Gain				600		V/V
V_C Source Current	V_{FB} = 0.4V, V_C = 1.25V			320		µA
V_C Sink Current	V_{FB} = 0.8V, V_C = 1.25V			320		µA
V_C Pin to Switch Current Gain				18		A/V
V_C Clamp Voltage				2.3		V
BIAS Pin Current Consumption	V_{BIAS} = 3.3V, f_{SW} = 2MHz, V_{IN} = 12V			60		mA
Minimum On-Time	I_{LOAD} = 3A, SYNC = 2V	●		25	40	ns
Minimum Off-Time				75	100	ns
Oscillator Frequency	R_T = 226k R_T = 38.3k R_T = 16.9k	● ● ●	170 0.96 1.8	200 1 2	230 1.04 2.2	kHz MHz MHz
Top Power NMOS On-Resistance	I_{SW} = 1A			12		mΩ
Top Power NMOS Current Limit		●	24	30	34	A
Bottom Power NMOS On-Resistance	V_{INTVCC} = 3.4V, I_{SW} = 1A			4.5		mΩ
Bottom Power NMOS Current Limit	V_{INTVCC} = 3.4V		15	21	27	A
SW Leakage Current	V_{IN} = 42V, V_{SW} = 0V, 42V		–1.5		1.5	µA
EN/UV Pin Threshold	EN/UV Rising	●	0.93	0.98	1.03	V
EN/UV Pin Hysteresis				40		mV
EN/UV Pin Current	$V_{EN/UV}$ = 2V		–20		20	nA
PG Upper Threshold Offset from V_{FB}	V_{FB} Rising	●	6	7.75	9.5	%
PG Lower Threshold Offset from V_{FB}	V_{FB} Falling	●	–9.5	–7.75	–6	%
PG Hysteresis				0.4		%
PG Leakage	V_{PG} = 3.3V		–80		80	nA
PG Pull-Down Resistance	V_{PG} = 0.1V	●		600	2000	Ω
SYNC/MODE Threshold	SYNC/MODE DC and Clock Low Level Voltage SYNC/MODE Clock High Level Voltage SYNC/MODE DC High Level Voltage	● ● ●	0.7 2.2		 1.5 2.9	V V V
Spread Spectrum Modulation Frequency Range	R_T = 38.3k			24		%

ELECTRICAL CHARACTERISTICS

The ● denotes the specifications which apply over the full operating temperature range, otherwise specifications are at T_A = 25°C.

PARAMETER	CONDITIONS		MIN	TYP	MAX	UNITS
Spread Spectrum Modulation Frequency				3		kHz
SS Source Current		●	1.3	2.0	2.7	µA
SS Pull-Down Resistance	Fault Condition, SS = 0.1V			200		Ω
V_{IN} to Disable Forced Continuous Mode	V_{IN} Rising		35	37.5	40	V

Note 1: Stresses beyond those listed under Absolute Maximum Ratings may cause permanent damage to the device. Exposure to any Absolute Maximum Rating condition for extended periods may affect device reliability and lifetime.

Note 2: The LT8648SE is guaranteed to meet performance specifications from 0°C to 125°C junction temperature. Specifications over the –40°C to 125°C operating junction temperature range are assured by design, characterization, and correlation with statistical process controls. The LT8648SJ and LT8648SH are guaranteed over the full –40°C to 150°C operating junction temperature range. High junction temperatures degrade operating lifetimes. Operating lifetime is derated at junction temperatures greater than 125°C. The junction temperature (T_J, in °C) is calculated from the ambient temperature (T_A in °C) and power dissipation (PD, in Watts) according to the formula:

$$T_J = T_A + (PD \bullet \theta_{JA})$$

where θ_{JA} (in °C/W) is the package thermal impedance.

Note 3: θ values determined per JEDEC 51-7, 51-12. See the Applications Information section for information on improving the thermal resistance and for actual temperature measurements of a demo board in typical operating conditions.

Note 4: This IC includes overtemperature protection that is intended to protect the device during overload conditions. Junction temperature will exceed 150°C when overtemperature protection is active. Continuous operation above the specified maximum operating junction temperature will reduce lifetime.

TYPICAL PERFORMANCE CHARACTERISTICS

12V_{IN} to 5V_{OUT} Efficiency vs Frequency

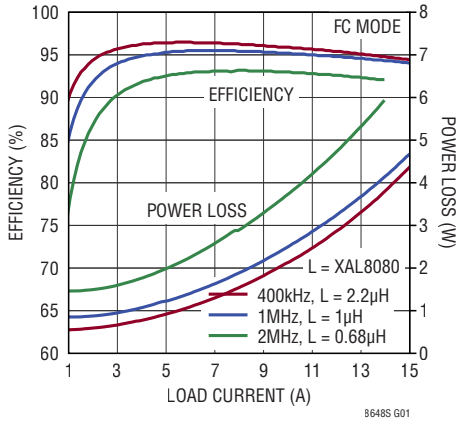

12V_{IN} to 3.3V_{OUT} Efficiency vs Frequency

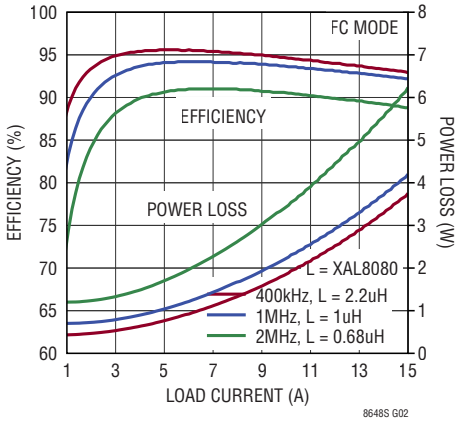

Efficiency at 5V_{OUT}

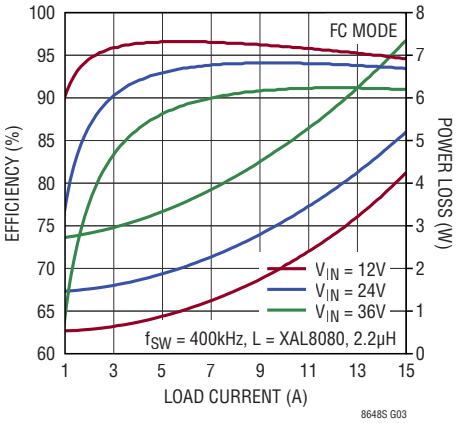

Efficiency at 3.3V_{OUT}

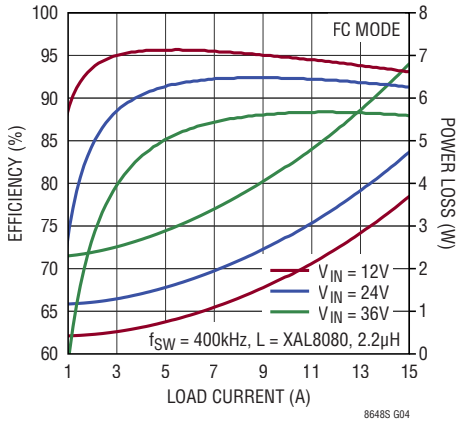

Low Load Efficiency at 5V_{OUT}

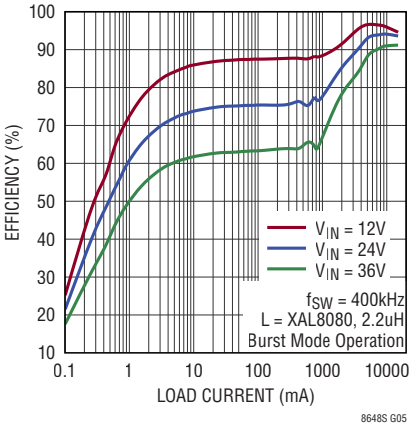

Low Load Efficiency at 3.3V_{OUT}

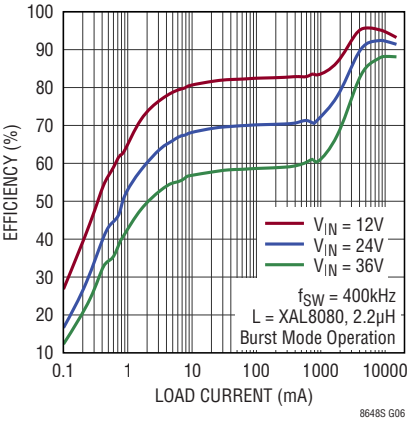

Efficiency vs Frequency

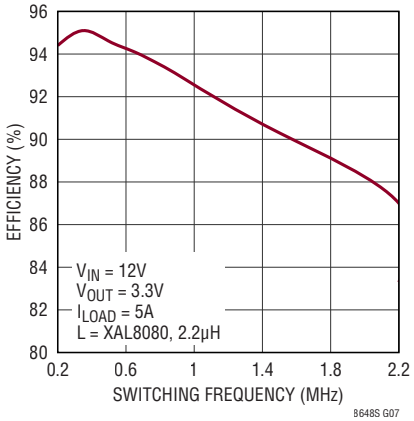

Reference Voltage

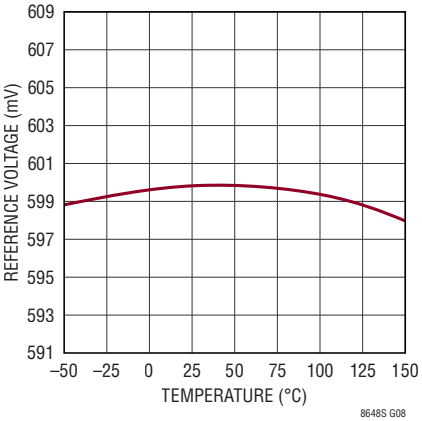

EN Pin Thresholds

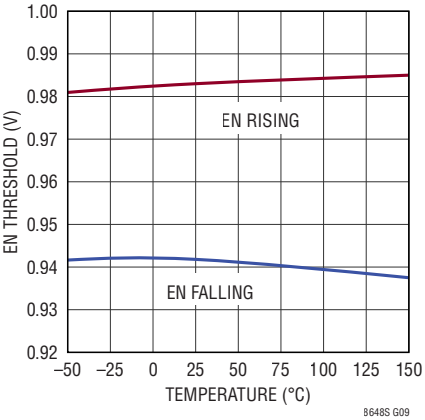

TYPICAL PERFORMANCE CHARACTERISTICS

Load Regulation

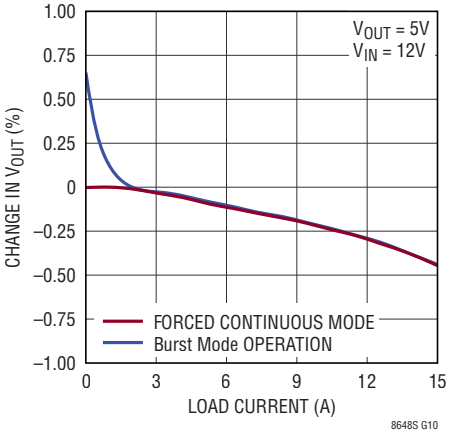

Line Regulation

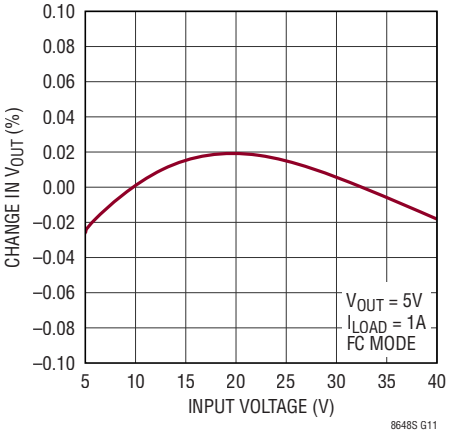

No-Load Supply Current

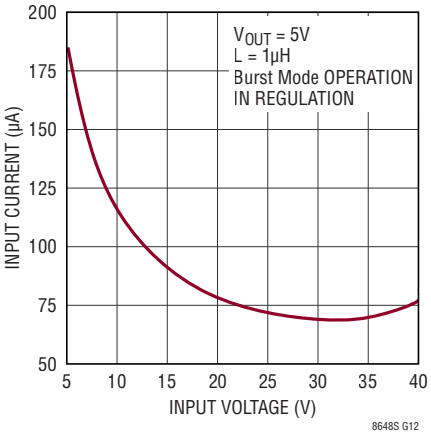

Top FET Current Limit vs Duty Cycle

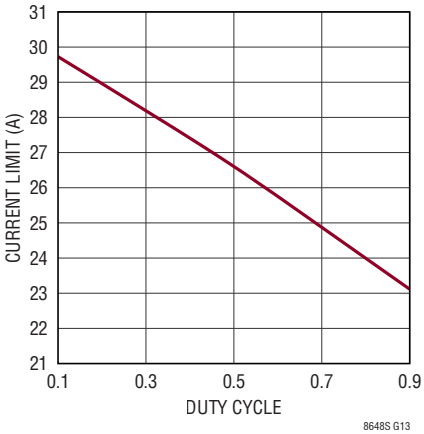

Top FET Current Limit vs Temperature

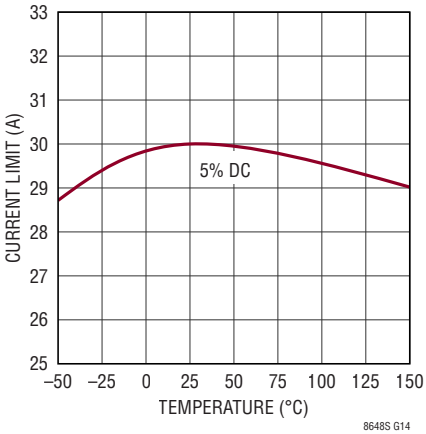

Switch $R_{DS(ON)}$ vs Temperature

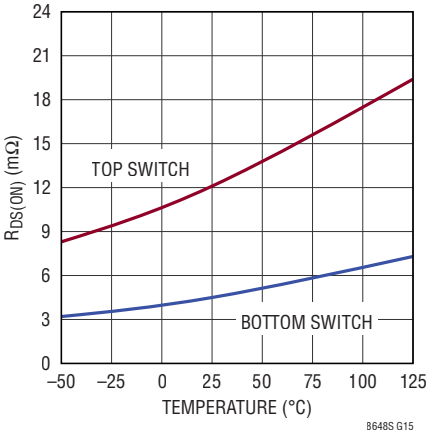

Dropout Voltage

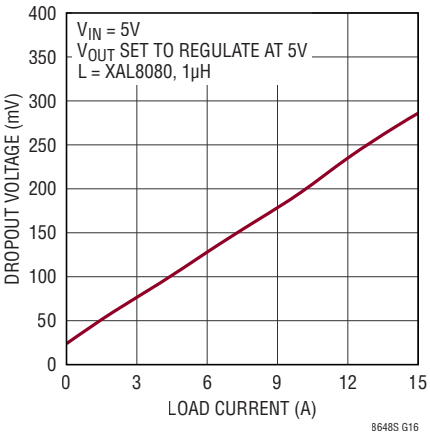

Minimum On-Time

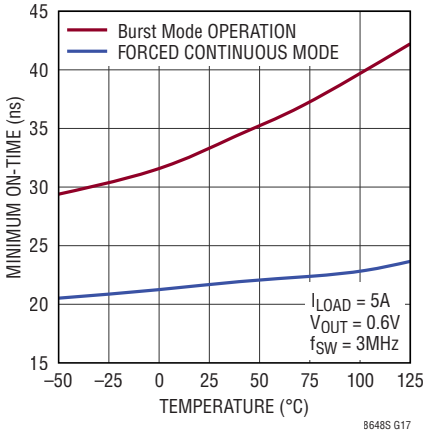

Switching Frequency

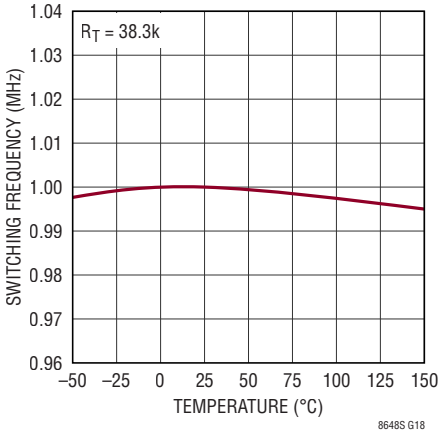

TYPICAL PERFORMANCE CHARACTERISTICS

Burst Frequency

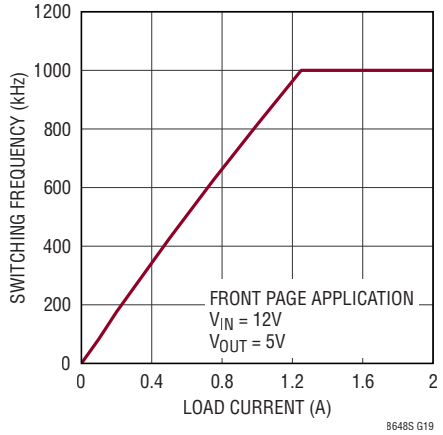

Soft-Start Tracking

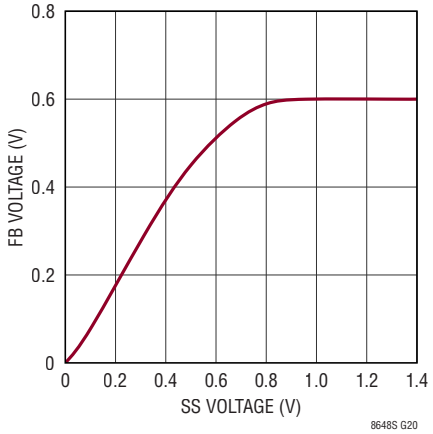

Soft-Start Current

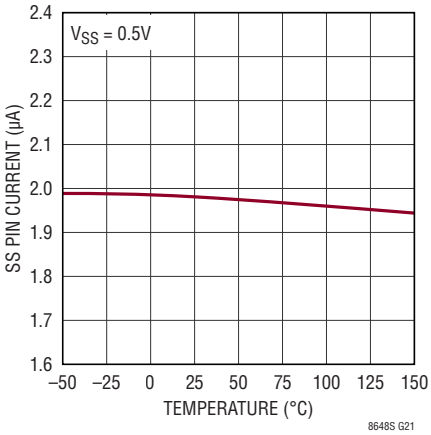

Error Amp Output Current

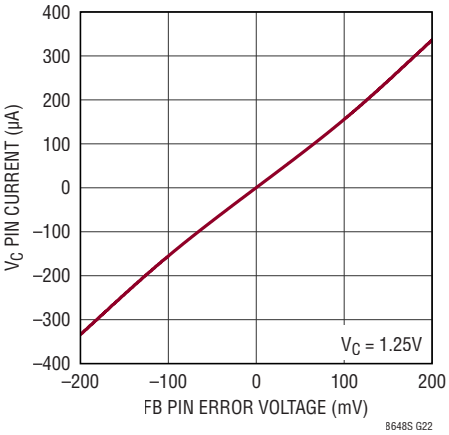

PG High Thresholds

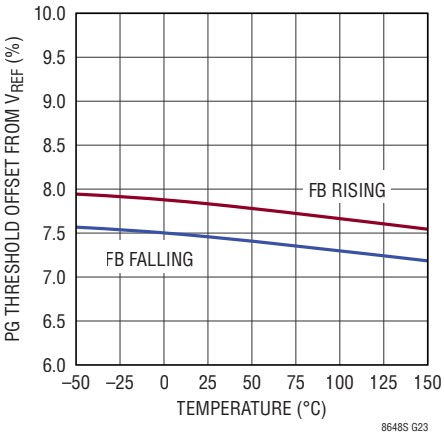

PG Low Thresholds

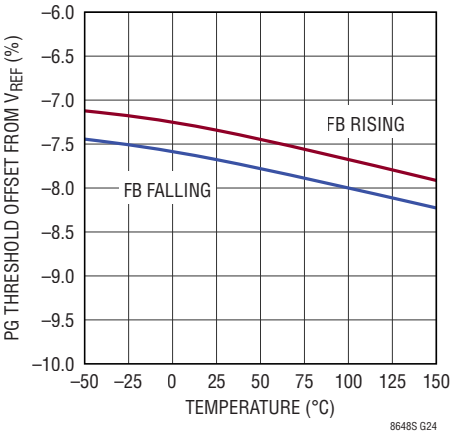

RT Programmed Switching Frequency

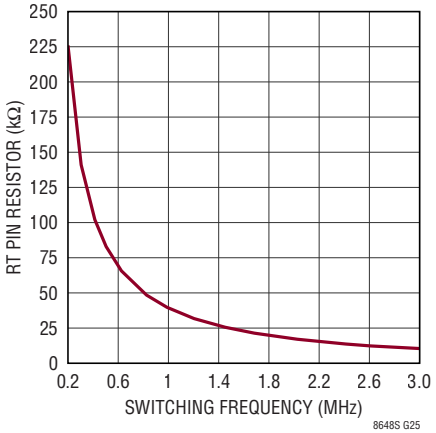

Minimum Input Voltage

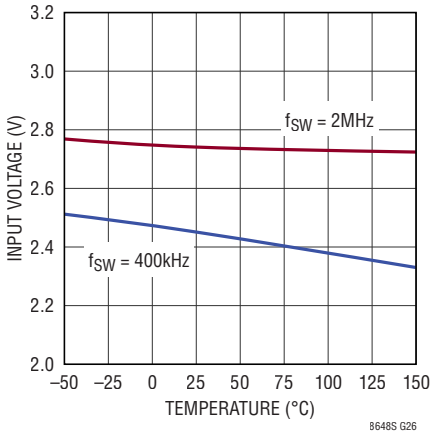

Bias Pin Current vs Input Voltage

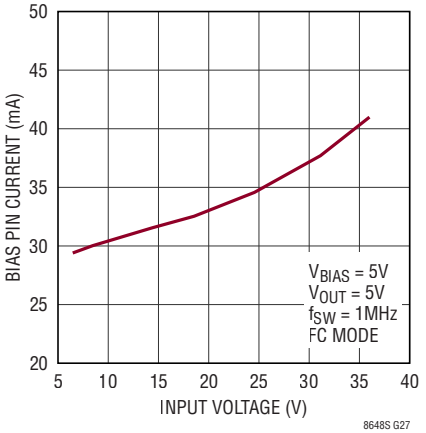

TYPICAL PERFORMANCE CHARACTERISTICS

Bias Pin Current vs Switching Frequency

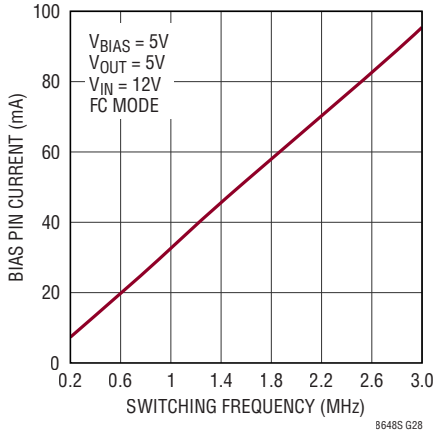

Case Temperature Rise

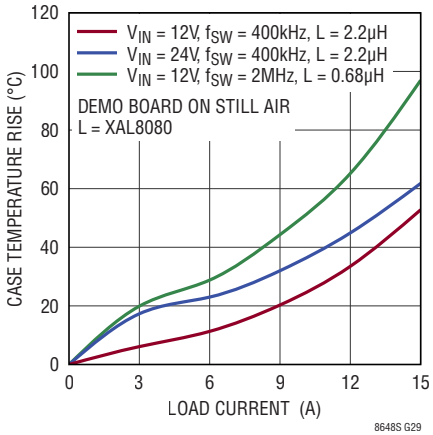

Switching Rising Edge

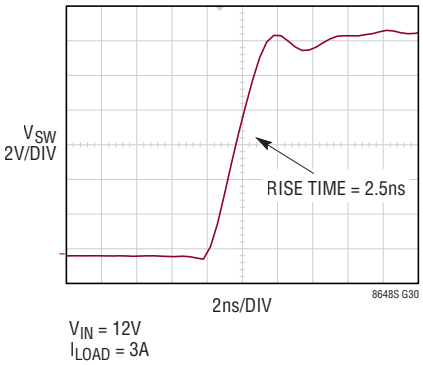

CLKOUT Waveforms

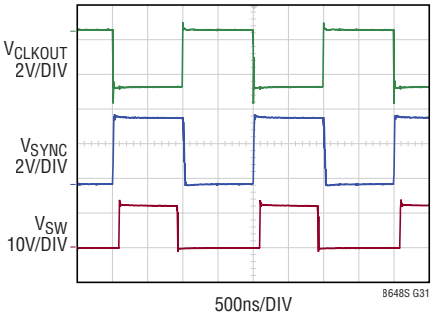

f_{SW} = 500kHz
SYNCHRONIZATION MODE

Switching Waveforms, Full Frequency Continuous Operation

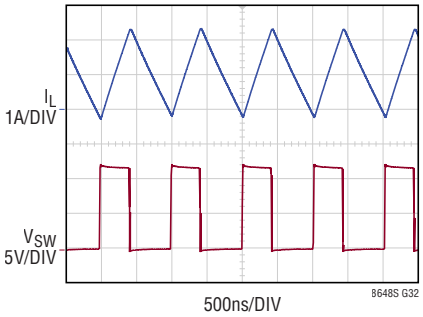

FRONT PAGE APPLICATION
$12V_{IN}$ TO $5V_{OUT}$ AT 1A
FC MODE

Switching Waveforms, Burst Mode Operation

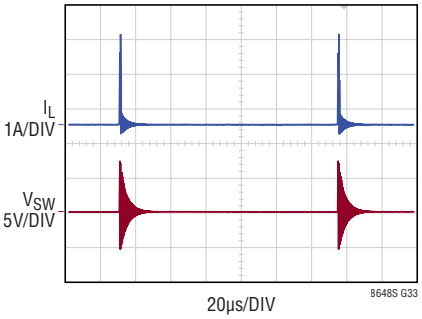

FRONT PAGE APPLICATION
$12V_{IN}$ TO $5V_{OUT}$ AT 10mA
Burst Mode OPERATION

TYPICAL PERFORMANCE CHARACTERISTICS

Transient Response; 3A to 10A Load Step

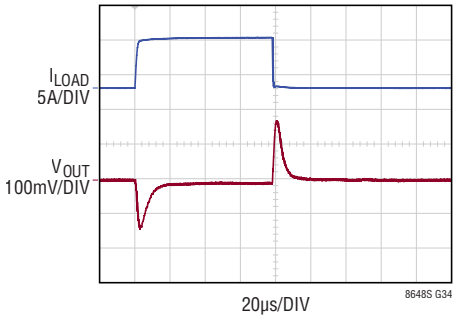

FRONT PAGE APPLICATION
3A TO 10A TRANSIENT
$12V_{IN}$, $5V_{OUT}$, f_{SW} = 1MHz
C_C = 330pF, R_C = 13.7k
C_{OUT} = 2 x 47µF, C_{LEAD} = 10pF

Transient Response; 100mA to 7.1A Load Step

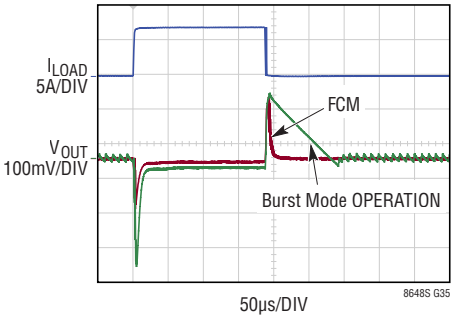

FRONT PAGE APPLICATION
100mA TO 7.1A TRANSIENT
$12V_{IN}$, $5V_{OUT}$, f_{SW} = 1MHz
C_C = 330pF, R_C = 13.7k
C_{OUT} = 2 x 47µF, C_{LEAD} = 10pF

Start-Up Dropout Performance

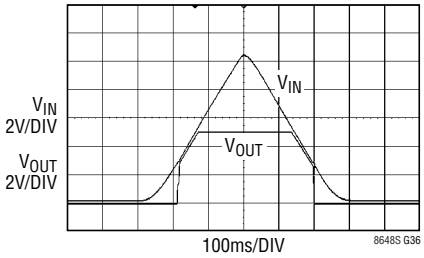

2.5Ω LOAD
(2A IN REGULATION)

Start-Up Dropout Performance

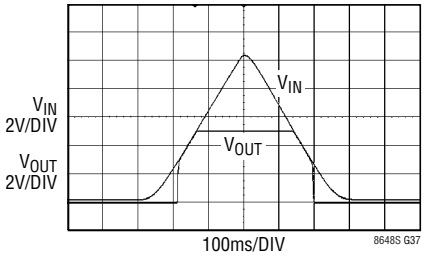

20Ω LOAD
(250mA IN REGULATION)

TYPICAL PERFORMANCE CHARACTERISTICS

Conducted EMI Performance

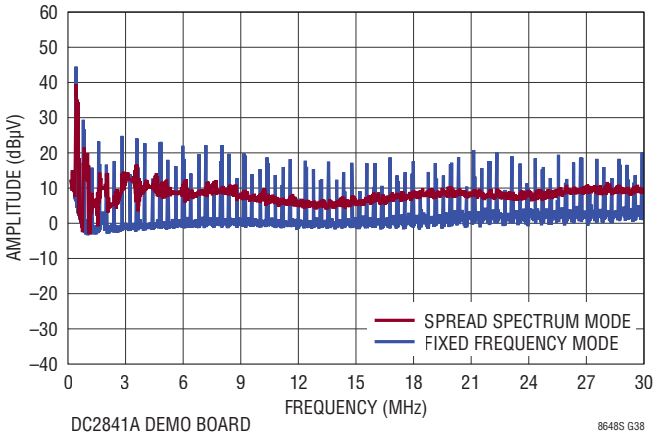

DC2841A DEMO BOARD
(WITH EMI FILTER INSTALLED)
14V INPUT TO 5V OUTPUT AT 15A, f_{SW} = 400kHz

Radiated EMI Performance
(CISPR25 Radiated Emission Test with Class 5 Peak Limits)

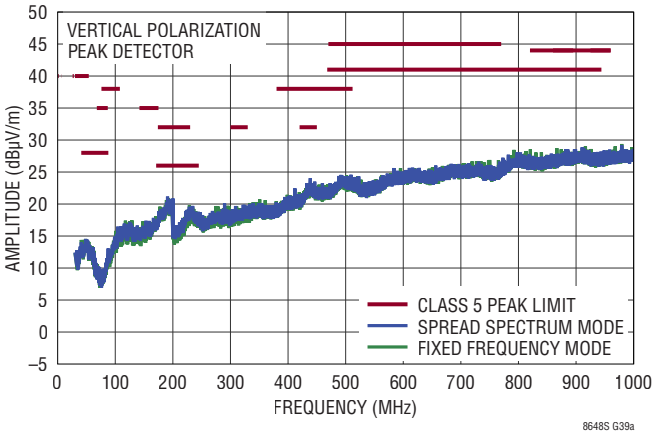

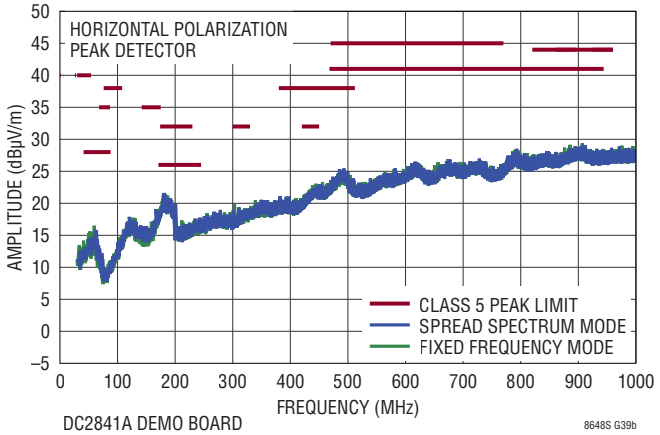

DC2841A DEMO BOARD
(WITH EMI FILTER INSTALLED)
14V INPUT TO 5V OUTPUT AT 15A, f_{SW} = 400kHz

PIN FUNCTIONS

BIAS (Pin 1): The internal regulator will draw current from BIAS instead of V_{IN} when BIAS is tied to a voltage higher than 3.1V. For output voltages of 3.3V to 25V this pin should be tied to V_{OUT}. If this pin is tied to a supply other than V_{OUT} use a 1µF local bypass capacitor on this pin. If no supply is available, tie to GND. However, especially for high input or high frequency applications, BIAS should be tied to output or an external supply of 3.3V or above.

$INTV_{CC}$ (Pin 2): Internal 3.4V Regulator Bypass Pin. The internal power drivers and control circuits are powered from this voltage. Do not load the $INTV_{CC}$ pin with external circuitry. $INTV_{CC}$ current will be supplied from BIAS if BIAS > 3.1V, otherwise current will be drawn from V_{IN}. Voltage on $INTV_{CC}$ will vary between 2.8V and 3.4V when BIAS is between 3.0V and 3.6V. Place a low ESR ceramic capacitor of at least 1µF from this pin to ground close to the IC.

BST (Pin 3): This pin is used to provide a drive voltage, higher than the input voltage, to the topside power switch. This pin should be floated.

SW (Pins 4 - 12): The SW pins are the outputs of the internal power switches. Tie these pins together and connect them to the inductor. This node should be kept small on the PCB for good performance and low EMI.

GND (Pins 13 - 18, 23, 24, Exposed Pad Pins 37 - 42): Ground. Place the negative terminal of the input capacitor as close to the GND pins as possible. The exposed pads should be soldered to the PCB for good thermal performance. If necessary due to manufacturing limitations Pins 37 to 42 may be left disconnected, however thermal performance will be degraded.

V_{IN} (Pins 19 - 21, 26 - 28): The V_{IN} pins supply current to the LT8648S internal circuitry and to the internal topside power switch. These pins must be tied together and be locally bypassed with a capacitor of 10µF or more. Be sure to place the positive terminal of the input capacitor as close as possible to the V_{IN} pins, and the negative capacitor terminal as close as possible to the GND pins.

NC (Pins 22, 25): No Connect. This pin is not connected to internal circuitry and can be tied anywhere on the PCB, typically ground.

EN/UV (Pin 29): The LT8648S is shut down when this pin is low and active when this pin is high. The hysteretic threshold voltage is 0.98V going up and 0.94V going down. Tie to V_{IN} if the shutdown feature is not used. An external resistor divider from V_{IN} can be used to program a V_{IN} threshold below which the LT8648S will shut down.

RT (Pin 30): A resistor is tied between RT and ground to set the switching frequency.

CLKOUT (Pin 31): In forced continuous mode, spread spectrum, and synchronization modes, the CLKOUT pin provides a 50% duty cycle square wave 180 degrees out of phase with the switching frequency. The low and high levels of the CLKOUT pin are ground and $INTV_{CC}$ respectively, and the drive strength of the CLKOUT pin is several hundred ohms. In Burst Mode operation, the CLKOUT pin will be low. Float this pin if the CLKOUT function is not used.

PIN FUNCTIONS

SYNC/MODE (Pin 32): For the LT8648S, this pin programs four different operating modes: 1) Burst Mode operation. Tie this pin to ground for Burst Mode operation at low output loads—this will result in low quiescent current. 2) Forced Continuous mode (FCM). This mode offers fast transient response and full frequency operation over a wide load range. Float this pin for FCM. When floating, pin leakage currents should be <1µA. 3) Spread spectrum mode. Tie this pin high to $INTV_{CC}$ (or >3V) for forced continuous mode with spread-spectrum modulation. 4) Synchronization mode. Drive this pin with a clock source to synchronize to an external frequency. During synchronization the part will operate in forced continuous mode.

PG (Pin 33): The PG pin is the open-drain output of an internal comparator. PG remains low until the FB pin is within ±7.75% of the final regulation voltage, and there are no fault conditions. PG is also pulled low when EN/UV is below 1V, $INTV_{CC}$ has fallen too low, V_{IN} is too low, or thermal shutdown. PG is valid when V_{IN} is above 3.4V.

V_C (Pin 34): The V_C pin is the output of the internal error amplifier. The voltage on this pin controls the peak switch current. Tie an RC network from this pin to ground to compensate the control loop.

SS (Pin 35): Output Tracking and Soft-Start Pin. This pin allows user control of output voltage ramp rate during start-up. A SS voltage below 1V forces the LT8648S to regulate the FB pin to a function of the SS pin voltage. See plot in the Typical Performance Characteristics section. When SS is above 1V, the tracking function is disabled and the internal reference resumes control of the error amplifier. An internal 2µA pull-up current from $INTV_{CC}$ on this pin allows a capacitor to program output voltage slew rate. This pin is pulled to ground with an internal 200Ω MOSFET during shutdown and fault conditions; use a series resistor if driving from a low impedance output. This pin may be left floating if the soft-start feature is not being used.

FB (Pin 36): The LT8648S regulates the FB pin to 0.6V. Connect the feedback resistor divider tap to this pin. Also, connect a phase lead capacitor between FB and V_{OUT}. Typically, this capacitor is 4.7pF to 47pF.

Corner Pins: These pins are for mechanical support only and can be tied anywhere on the PCB, typically ground.

BLOCK DIAGRAM

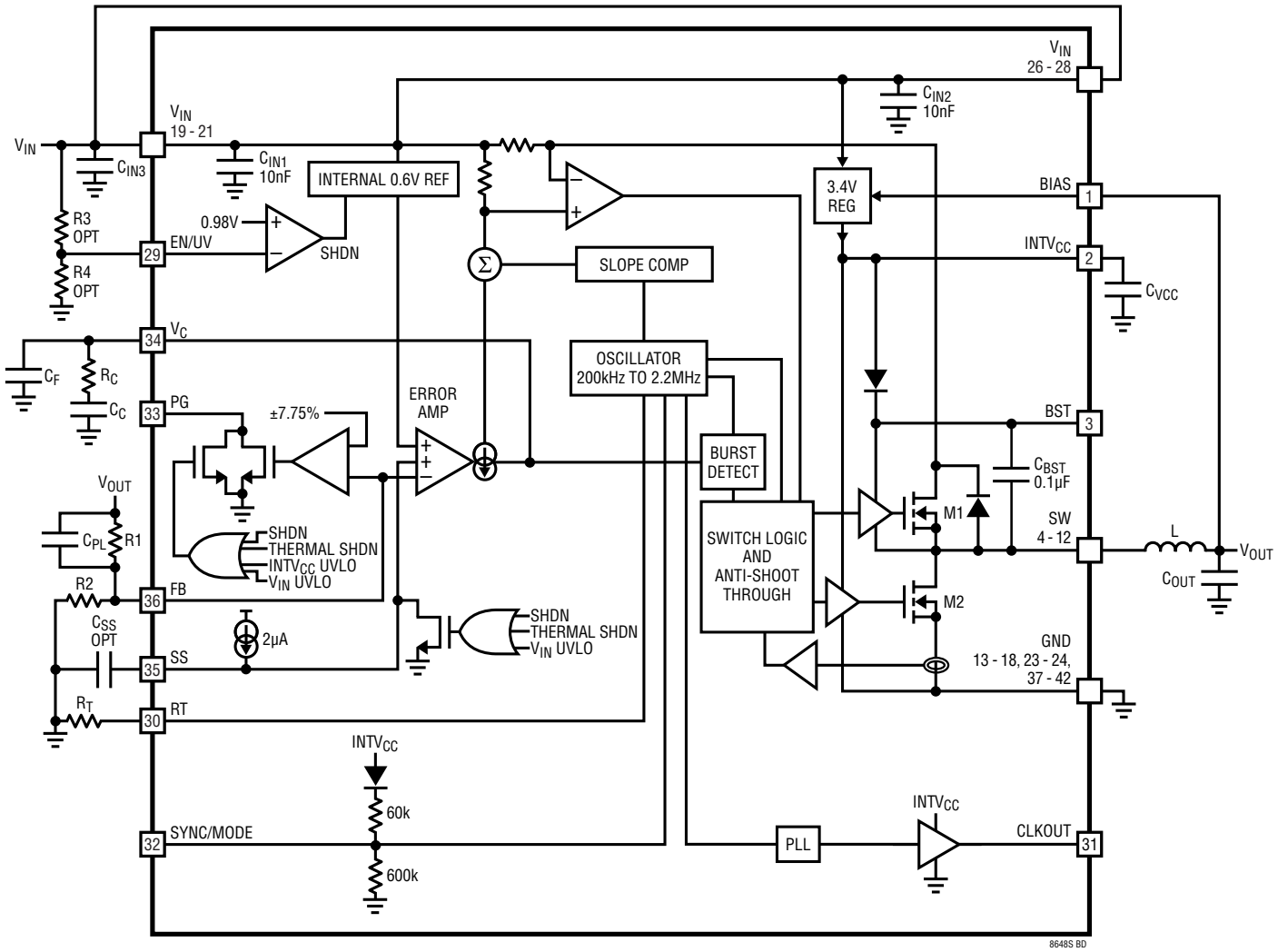

OPERATION

The LT8648S is a monolithic, constant frequency, current mode step-down DC/DC converter. An oscillator, with frequency set using a resistor on the RT pin, turns on the internal top power switch at the beginning of each clock cycle. Current in the inductor then increases until the top switch current comparator trips and turns off the top power switch. The peak inductor current at which the top switch turns off is controlled by the voltage on the internal VC node. The error amplifier servos the VC node by comparing the voltage on the V_{FB} pin with an internal 0.6V reference. When the load current increases it causes a reduction in the feedback voltage relative to the reference leading the error amplifier to raise the VC voltage until the average inductor current matches the new load current. When the top power switch turns off, the synchronous power switch turns on until the next clock cycle begins, or inductor current falls to zero (only in Burst Mode Operation). If overload conditions result in more than 21A flowing through the bottom switch, the next clock cycle will be delayed until switch current returns to a safe level.

The "S" in LT8648S refers to the second generation silent switcher technology. This technology allows fast switching edges for high efficiency at high switching frequencies, while simultaneously achieving good EMI performance. This includes the integration of ceramic capacitors into the package for V_{IN} and BST (see Block Diagram). These caps keep all the fast AC current loops small, which improves EMI performance.

If the EN/UV pin is low, the LT8648S is shut down and draws approximately 6µA from the input. When the EN/UV pin is above 0.98V, the switching regulator will become active.

To optimize efficiency at light loads, the LT8648S operates in Burst Mode operation in light load situations. Between bursts, all circuitry associated with controlling the output switch is shut down, reducing the input supply current to 140µA (BIAS = 0). In a typical application, 100µA (V_{IN} = 12V, BIAS = $5V_{OUT}$) will be consumed from the input supply when regulating with no load. The SYNC/MODE pin is tied low to use Burst Mode operation and can be floated to use forced continuous mode (FCM). If a clock is applied to the SYNC/MODE pin, the part will synchronize to an external clock frequency and operate in FCM.

The LT8648S can operate in forced continuous mode (FCM) for fast transient response and full frequency operation over a wide load range. When in FCM the oscillator operates continuously and positive SW transitions are aligned to the clock. Negative inductor current is allowed. The LT8648S can sink current from the output and return this charge to the input in this mode, improving load step transient response.

To improve EMI, the LT8648S can operate in spread spectrum mode. This feature varies the clock with a triangular frequency modulation of +24%. For example, if the LT8648S's frequency is programmed to switch at 2MHz, spread spectrum mode will modulate the oscillator between 2MHz and approximately 2.5MHz. The SYNC/MODE pin should be tied high to $INTV_{CC}$ (or >3V) to enable spread spectrum modulation with forced continuous mode.

To improve efficiency across all loads, supply current to internal circuitry can be sourced from the BIAS pin when biased at 3.3V or above. Else, the internal circuitry will draw current from V_{IN}. The BIAS pin should be connected to V_{OUT} if the LT8648S output is programmed at 3.3V to 25V.

The V_C pin optimizes the loop compensation of the switching regulator based on the programmed switching frequency, allowing for a fast transient response. The V_C pin also enables current sharing and a CLKOUT pin enables synchronizing other regulators to the LT8648S.

Comparators monitoring the FB pin voltage will pull the PG pin low if the output voltage varies more than ±7.75% (typical) from the set point, or if a fault condition is present.

The oscillator reduces the LT8648S's operating frequency when the voltage at the FB pin is low. This frequency foldback helps to control the inductor current when the output voltage is lower than the programmed value which occurs during start-up or overcurrent conditions. When a clock is applied to the SYNC/MODE pin, the SYNC/MODE pin is floated, or held DC high, the frequency foldback is disabled and the switching frequency will slow down only during overcurrent conditions.

APPLICATIONS INFORMATION

Low EMI PCB Layout

The LT8648S is specifically designed to minimize EMI emissions and also to maximize efficiency when switching at high frequencies. For optimal performance the LT8648S should use multiple V_{IN} bypass capacitors.

Two small <1µF capacitors can be placed as close as possible to the LT8648S (C_{OPT1}, C_{OPT2}) and a third capacitor with a larger value, 10µF or higher, should be placed nearby.

See Figure 1 for a recommended PCB layout.

For more detail and PCB design files refer to the Demo Board guide for the LT8648S.

Note that large, switched currents flow in the LT8648S V_{IN} and GND pins and the input capacitors. The loops formed by the input capacitors should be as small as possible by placing the capacitors adjacent to the V_{IN} and GND pins. Capacitors with small case size such as 0603 are optimal due to lowest parasitic inductance.

The input capacitors, along with the inductor and output capacitors, should be placed on the same side of the circuit board, and their connections should be made on that layer. Place a local, unbroken ground plane under the application circuit on the layer closest to the surface layer. The SW and BOOST nodes should be as small as possible. Finally, keep the FB and RT nodes small so that the ground traces will shield them from the SW and BOOST nodes. The exposed pads on the bottom of the package should be soldered to the PCB to reduce thermal resistance to ambient. To keep thermal resistance low, extend the ground plane from GND as much as possible, and add thermal vias to additional ground planes within the circuit board and on the bottom side.

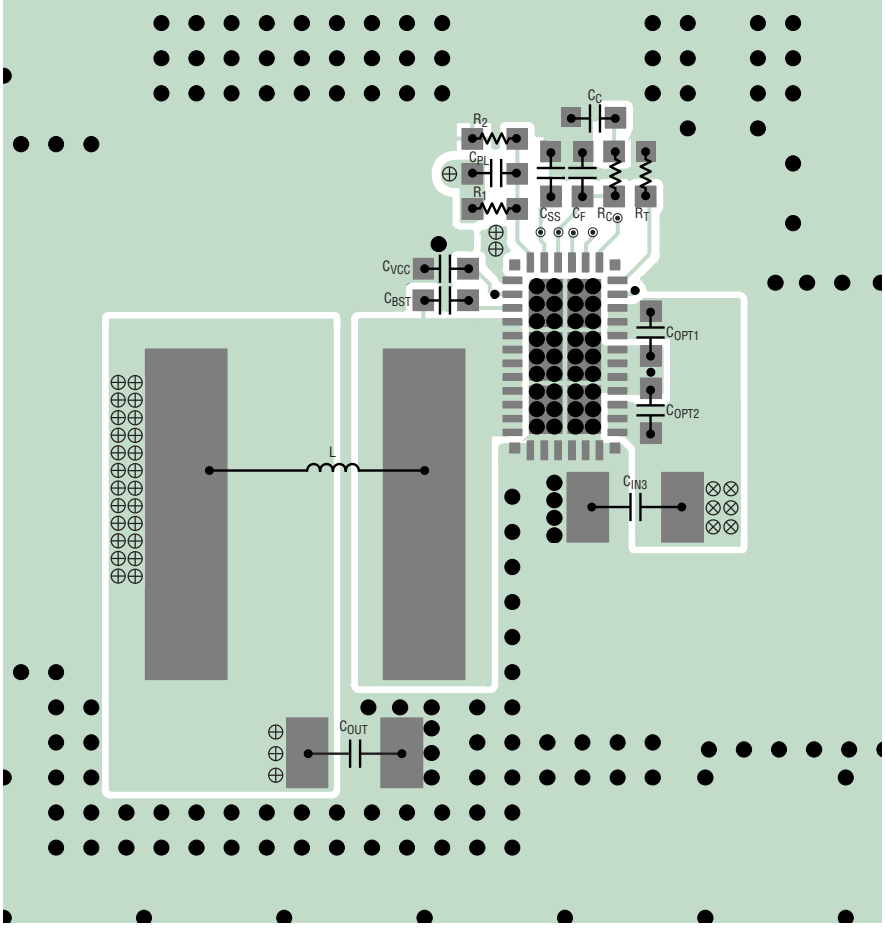

● GROUND VIA ⊗ V_{IN} VIA ⊕ V_{OUT} VIA ◉ OTHER SIGNAL VIAS

Figure 1. Recommended PCB Layout

APPLICATIONS INFORMATION

Burst Mode Operation

To enhance efficiency at light loads, the LT8648S operates in low ripple Burst Mode operation, which keeps the output capacitor charged to the desired output voltage while minimizing the input quiescent current and minimizing output voltage ripple. In Burst Mode operation the LT8648S delivers single small pulses of current to the output capacitor followed by sleep periods where the output power is supplied by the output capacitor. While in sleep mode the LT8648S consumes 140µA.

As the output load decreases, the frequency of single current pulses decreases (see Figure 2) and the percentage of time the LT8648S is in sleep mode increases, resulting in much higher light load efficiency than for typical converters. By maximizing the time between pulses, the quiescent current approaches 100µA for a typical application when there is no output load. Therefore, to optimize the quiescent current performance at light loads, the current in the feedback resistor divider must be minimized as it appears to the output as load current.

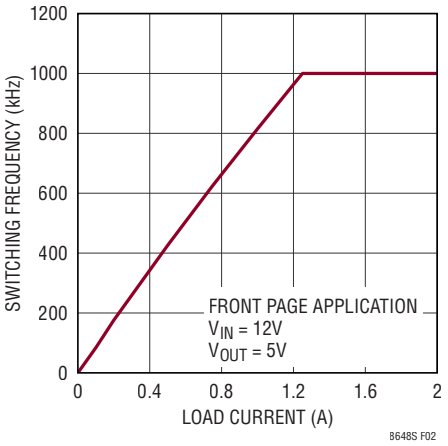

Figure 2. SW Frequency vs Load Information in Burst Mode Operation

In order to achieve higher light load efficiency, more energy must be delivered to the output during the single small pulses in Burst Mode operation such that the LT8648S can stay in sleep mode longer between each pulse. This can be achieved by using a larger value inductor (i.e., 4.7µH), and should be considered independent of switching frequency when choosing an inductor. For example, while a lower inductor value would typically be used for a high switching frequency application, if high light load efficiency is desired, a higher inductor value should be chosen. See curve in Typical Performance Characteristics.

While in Burst Mode operation the current limit of the top switch is approximately 3A (as shown in Figure 3), resulting in low output voltage ripple. Increasing the output capacitance will decrease output ripple proportionally. As load ramps upward from zero the switching frequency will increase but only up to the switching frequency programmed by the resistor at the RT pin as shown in Figure 2.

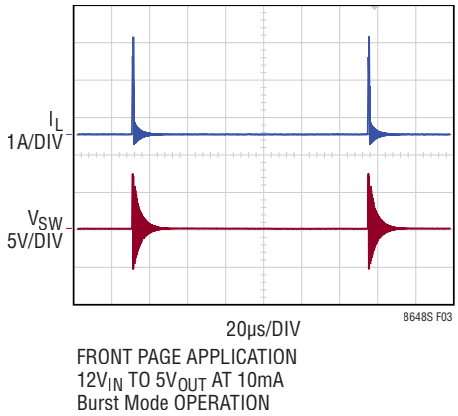

Figure 3. Burst Mode Operation

The output load at which the LT8648S reaches the programmed frequency varies based on input voltage, output voltage and inductor choice. To select low ripple Burst Mode operation, tie the SYNC/MODE pin below 0.7V (this can be ground or a logic low output).

Forced Continuous Mode

The LT8648S can operate in forced continuous mode (FCM) for fast transient response and full frequency operation over a wide load range. When in FCM, the oscillator operates continuously and positive SW transitions are aligned to the clock. Negative inductor current is allowed at light loads or under large transient conditions. The LT8648S can sink current from the output and return this charge to the input in this mode, improving load step transient response (see Figure 4). At light

APPLICATIONS INFORMATION

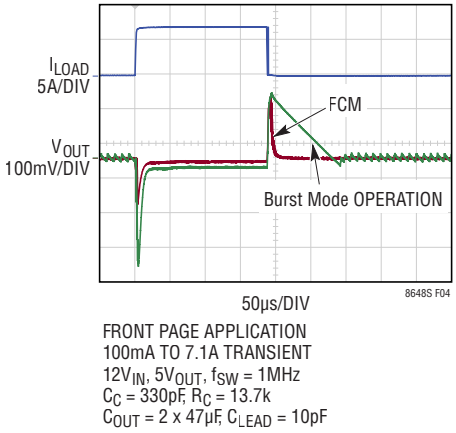

Figure 4. LT8648S Load Step Transient Response with and without Forced Continuous Mode

loads, FCM operation is less efficient than Burst Mode operation, but may be desirable in applications where it is necessary to keep switching harmonics out of the signal band. FCM must be used if the output is required to sink current. To enable FCM, float the SYNC/MODE pin. Leakage current on this pin should be <1µA. See Block Diagram for internal pull-up and pull-down resistance.

FCM is disabled if the V_{IN} pin is held above 37V or if the FB pin is held greater than 7.75% above the feedback reference voltage. FCM is also disabled during soft-start until the soft-start capacitor is fully charged. When FCM is disabled in these ways, negative inductor current is not allowed and the LT8648S operates in pulse-skipping mode.

Spread Spectrum Mode

The LT8648S features spread spectrum operation to further reduce EMI emissions. To enable spread spectrum operation, the SYNC/MODE pin should be tied high to $INTV_{CC}$ (or >3V). In this mode, triangular frequency modulation is used to vary the switching frequency between the value programmed by RT to approximately 24% higher than that value. The modulation frequency is approximately 3kHz. For example, when the LT8648S is programmed to 2MHz, the frequency will vary from 2MHz to approximately 2.5MHz at a 3kHz rate. When spread spectrum operation is selected, Burst Mode operation is disabled, and the part will run in forced continuous mode.

Synchronization

To synchronize the LT8648S oscillator to an external frequency, connect a square wave to the SYNC/MODE pin. The square wave amplitude should have valleys that are below 0.7V and peaks above 1.5V (up to 6V) with a minimum on-time and off-time of 50ns.

The LT8648S will not enter Burst Mode operation at low output loads while synchronized to an external clock, but instead will run forced continuous mode to maintain regulation. The LT8648S may be synchronized over a 200kHz to 2.2MHz range. The RT resistor should be chosen to set the LT8648S switching frequency equal to or below the lowest synchronization input. For example, if the synchronization signal will be 500kHz and higher, the RT should be selected for 500kHz. The slope compensation is set by the RT value, while the minimum slope compensation required to avoid subharmonic oscillations is established by the inductor size, input voltage and output voltage. Since the synchronization frequency will not change the slopes of the inductor current waveform, if the inductor is large enough to avoid subharmonic oscillations at the frequency set by RT, then the slope compensation will be sufficient for all synchronization frequencies.

FB Resistor Network

The output voltage is programmed with a resistor divider between the output and the FB pin. Choose the resistor values according to:

$$R1 = R2\left(\frac{V_{OUT}}{0.6V} - 1\right) \quad (1)$$

Reference designators refer to the Block Diagram. 1% resistors are recommended to maintain output voltage accuracy.

When using large FB resistors, a 4.7pF to 47pF phase-lead capacitor should be connected from V_{OUT} to FB.

Setting the Switching Frequency

The LT8648S uses a constant frequency PWM architecture that can be programmed to switch from 200kHz to 2.2MHz by using a resistor tied from the RT pin to ground.

APPLICATIONS INFORMATION

A table showing the necessary R_T value for a desired switching frequency is in Table 1.

The R_T resistor required for a desired switching frequency can be calculated using:

$$R_T = \frac{44.8}{f_{SW}} - 5.9 \quad (2)$$

where R_T is in kΩ and f_{SW} is the desired switching frequency in MHz.

Table 1. SW Frequency vs R_T Value

f_{SW} (MHz)	R_T (kΩ)
0.2	226
0.3	143
0.4	105
0.5	82.5
0.6	66.5
0.7	56.2
0.8	48.7
1.0	38.3
1.2	31.6
1.4	26.1
1.6	22.1
1.8	19.1
2.0	16.9
2.2	15.4

Operating Frequency Selection and Trade-Offs

Selection of the operating frequency is a trade-off between efficiency, component size, and input voltage range. The advantage of high frequency operation is that smaller inductor and capacitor values may be used. The disadvantages are lower efficiency and a smaller input voltage range.

The highest switching frequency ($f_{SW(MAX)}$) for a given application can be calculated as follows:

$$f_{SW(MAX)} = \frac{V_{OUT} + V_{SW(BOT)}}{t_{ON(MIN)}\left(V_{IN} - V_{SW(TOP)} + V_{SW(BOT)}\right)} \quad (3)$$

where V_{IN} is the typical input voltage, V_{OUT} is the output voltage, $V_{SW(TOP)}$ and $V_{SW(BOT)}$ are the internal switch drops (~0.18V, ~0.07V, respectively at maximum load) and $t_{ON(MIN)}$ is the minimum top switch on-time (see the Electrical Characteristics). This equation shows that a slower switching frequency is necessary to accommodate a high V_{IN}/V_{OUT} ratio.

For transient operation, V_{IN} may go as high as the absolute maximum rating of 42V regardless of the R_T value, however the LT8648S will reduce switching frequency as necessary to maintain control of inductor current to assure safe operation.

The LT8648S is capable of a maximum duty cycle of approximately 99%, and the V_{IN}-to-V_{OUT} dropout is limited by the $R_{DS(ON)}$ of the top switch. In this mode the LT8648S skips switch cycles, resulting in a lower switching frequency than programmed by RT.

For applications that cannot allow deviation from the programmed switching frequency at low V_{IN}/V_{OUT} ratios use the following formula to set switching frequency:

$$V_{IN(MIN)} = \frac{V_{OUT} + V_{SW(BOT)}}{1 - f_{SW} \bullet t_{OFF(MIN)}} - V_{SW(BOT)} + V_{SW(TOP)} \quad (4)$$

where $V_{IN(MIN)}$ is the minimum input voltage without skipped cycles, V_{OUT} is the output voltage, $V_{SW(TOP)}$ and $V_{SW(BOT)}$ are the internal switch drops (~0.18V, ~0.07V, respectively at maximum load), f_{SW} is the switching frequency (set by R_T), and $t_{OFF(MIN)}$ is the minimum switch off-time. Note that higher switching frequency will increase the minimum input voltage below which cycles will be dropped to achieve higher duty cycle.

Inductor Selection and Maximum Output Current

The LT8648S is designed to minimize solution size by allowing the inductor to be chosen based on the output load requirements of the application. During overload or short-circuit conditions the LT8648S safely tolerates operation with a saturated inductor through the use of a high speed peak-current mode architecture.

A good first choice for the inductor value is:

$$L = \left(\frac{V_{OUT} + V_{SW(BOT)}}{f_{SW}}\right) \bullet 0.2 \quad (5)$$

where f_{SW} is the switching frequency in MHz, V_{OUT} is the output voltage, $V_{SW(BOT)}$ is the bottom switch drop (~0.07V) and L is the inductor value in μH.

APPLICATIONS INFORMATION

To avoid overheating and poor efficiency, an inductor must be chosen with an RMS current rating that is greater than the maximum expected output load of the application. In addition, the saturation current (typically labeled I_{SAT}) rating of the inductor must be higher than the load current plus 1/2 of in inductor ripple current:

$$I_{L(PEAK)} = I_{LOAD(MAX)} + \frac{1}{2}\Delta I_L \quad (6)$$

where ΔI_L is the inductor ripple current as calculated in Equation 9 and $I_{LOAD(MAX)}$ is the maximum output load for a given application.

As a quick example, an application requiring 3A output should use an inductor with an RMS rating of greater than 3A and an I_{SAT} of greater than 4A. During long duration overload or short-circuit conditions, the inductor RMS rating requirement is greater to avoid overheating of the inductor. To keep the efficiency high, the series resistance (DCR) should be less than 4mΩ, and the core material should be intended for high frequency applications.

The LT8648S limits the peak switch current in order to protect the switches and the system from overload faults. The top switch current limit (I_{LIM}) is 30A at low duty cycles and decreases linearly to 24A at DC = 0.8. The inductor value must then be sufficient to supply the desired maximum output current ($I_{OUT(MAX)}$), which is a function of the switch current limit (I_{LIM}) and the ripple current.

$$I_{OUT(MAX)} = I_{LIM} - \frac{\Delta I_L}{2} \quad (7)$$

The peak-to-peak ripple current in the inductor can be calculated as follows:

$$\Delta I_L = \frac{V_{OUT}}{L \bullet f_{SW}} \bullet \left(1 - \frac{V_{OUT}}{V_{IN(MAX)}}\right) \quad (8)$$

where f_{SW} is the switching frequency of the LT8648S, and L is the value of the inductor. Therefore, the maximum output current that the LT8648S will deliver depends on the switch current limit, the inductor value, and the input and output voltages. The inductor value may have to be increased if the inductor ripple current does not allow sufficient maximum output current ($I_{OUT(MAX)}$) given the switching frequency, and maximum input voltage used in the desired application.

In order to achieve higher light load efficiency, more energy must be delivered to the output during the single small pulses in Burst Mode operation such that the LT8648S can stay in sleep mode longer between each pulse. This can be achieved by using a larger value inductor (i.e., 4.7µH), and should be considered independent of switching frequency when choosing an inductor. For example, while a lower inductor value would typically be used for a high switching frequency application, if high light load efficiency is desired, a higher inductor value should be chosen. See curve in Typical Performance Characteristics.

The optimum inductor for a given application may differ from the one indicated by this design guide. A larger value inductor provides a higher maximum load current and reduces the output voltage ripple. For applications requiring smaller load currents, the value of the inductor may be lower and the LT8648S may operate with higher ripple current. This allows use of a physically smaller inductor, or one with a lower DCR resulting in higher efficiency. Be aware that low inductance may result in discontinuous mode operation, which further reduces maximum load current.

For more information about maximum output current and discontinuous operation, see Analog Devices' Application Note 44.

For duty cycles greater than 50% (V_{OUT}/V_{IN} > 0.5), a minimum inductance is required to avoid subharmonic oscillation. (See Equation 9). See Application Note 19 for more details.

$$L_{MIN} = \frac{V_{IN}(2 \bullet DC - 1)}{7 \bullet f_{SW}} \quad (9)$$

where DC is the duty cycle ratio (V_{OUT}/V_{IN}) and f_{SW} is the switching frequency.

Input Capacitors

The V_{IN} of the LT8648S should be bypassed with at least three ceramic capacitors for best performance. Two small ceramic capacitors of <1µF can be placed close to the part

APPLICATIONS INFORMATION

(C_{OPT1}, C_{OPT2}). These capacitors should be 0402 or 0603 in size. For automotive applications requiring 2 series input capacitors, two small 0402 or 0603 may be placed at each side of the LT8648S near the V_{IN} and GND pins.

A third, larger ceramic capacitor of 10µF or larger should be placed close to C_{OPT1} or C_{OPT2}. See PCB Layout section for more detail. X7R or X5R capacitors are recommended for best performance across temperature and input voltage variations.

Note that larger input capacitance is required when a lower switching frequency is used. If the input power source has high impedance, or there is significant inductance due to long wires or cables, additional bulk capacitance may be necessary. This can be provided with a low performance electrolytic capacitor.

A ceramic input capacitor combined with trace or cable inductance forms a high quality (under damped) tank circuit. If the LT8648S circuit is plugged into a live supply, the input voltage can ring to twice its nominal value, possibly exceeding the LT8648S's voltage rating. This situation is easily avoided (see Analog Devices Application Note 88).

Output Capacitor and Output Ripple

The output capacitor has two essential functions. Along with the inductor, it filters the square wave generated by the LT8648S to produce the DC output. In this role it determines the output ripple, thus low impedance at the switching frequency is important. The second function is to store energy in order to satisfy transient loads and stabilize the LT8648S's control loop. Ceramic capacitors have very low equivalent series resistance (ESR) and provide the best ripple performance. For good starting values, see the Typical Applications section.

Use X5R or X7R types. This choice will provide low output ripple and good transient response. Transient performance can be improved with a higher value output capacitor and the addition of a feedforward capacitor placed between V_{OUT} and FB. Increasing the output capacitance will also decrease the output voltage ripple. A lower value of output capacitor can be used to save space and cost but transient performance will suffer and may cause loop instability. See the Typical Applications in this data sheet for suggested capacitor values.

When choosing a capacitor, special attention should be given to the data sheet to calculate the effective capacitance under the relevant operating conditions of voltage bias and temperature. A physically larger capacitor or one with a higher voltage rating may be required.

Ceramic Capacitors

Ceramic capacitors are small, robust and have very low ESR. However, ceramic capacitors can cause problems when used with the LT8648S due to their piezoelectric nature. When in Burst Mode operation, the LT8648S's switching frequency depends on the load current, and at very light loads the LT8648S can excite the ceramic capacitor at audio frequencies, generating audible noise. Since the LT8648S operates at a lower current limit during Burst Mode operation, the noise is typically very quiet to a casual ear. If this is unacceptable, use a high performance tantalum or electrolytic capacitor at the output. Low noise ceramic capacitors are also available.

A final precaution regarding ceramic capacitors concerns the maximum input voltage rating of the LT8648S. As previously mentioned, a ceramic input capacitor combined with trace or cable inductance forms a high quality (underdamped) tank circuit. If the LT8648S circuit is plugged into a live supply, the input voltage can ring to twice its nominal value, possibly exceeding the LT8648S's rating. This situation is easily avoided (see Analog Devices Application Note 88).

Enable Pin

The LT8648S is in shutdown when the EN pin is low and active when the pin is high. The rising threshold of the EN comparator is 0.98V, with 40mV of hysteresis. The EN pin can be tied to V_{IN} if the shutdown feature is not used, or tied to a logic level if shutdown control is required.

Adding a resistor divider from V_{IN} to EN programs the LT8648S to regulate the output only when V_{IN} is above a desired voltage (see the Block Diagram). Typically, this threshold, $V_{IN(EN)}$, is used in situations where the input supply is current limited, or has a relatively high source resistance. A switching regulator draws constant power

APPLICATIONS INFORMATION

from the source, so source current increases as source voltage drops. This looks like a negative resistance load to the source and can cause the source to current limit or latch low under low source voltage conditions. The $V_{IN(EN)}$ threshold prevents the regulator from operating at source voltages where the problems might occur. This threshold can be adjusted by setting the values R3 and R4 such that they satisfy the following equation:

$$V_{IN(EN)} = \left(\frac{R3}{R4}+1\right)\bullet 0.98V \qquad (10)$$

where the LT8648S will remain off until V_{IN} is above $V_{IN(EN)}$. Due to the comparator's hysteresis, switching will not stop until the input falls slightly below $V_{IN(EN)}$.

When operating in Burst Mode operation for light load currents, the current through the $V_{IN(EN)}$ resistor network can easily be greater than the supply current consumed by the LT8648S. Therefore, the $V_{IN(EN)}$ resistors should be large to minimize their effect on efficiency at low loads.

$INTV_{CC}$ Regulator

An internal low dropout (LDO) regulator produces the 3.4V supply from V_{IN} that powers the drivers and the internal bias circuitry and must be bypassed to ground with a minimum of 1µF ceramic capacitor. The $INTV_{CC}$ can supply enough current for the LT8648S's circuitry. To improve efficiency the internal LDO can also draw current from the BIAS pin when the BIAS pin is at 3.1V or higher. Typically the BIAS pin can be tied to the output of the LT8648S, or can be tied to an external supply of 3.3V or above. If BIAS is connected to a supply other than V_{OUT}, be sure to bypass with a local ceramic capacitor. If the BIAS pin is below 3.0V, the internal LDO will consume current from V_{IN}. Applications with high input voltage and high switching frequency where the internal LDO pulls current from V_{IN} will increase die temperature because of the higher power dissipation across the LDO. Do not connect an external load to the $INTV_{CC}$ pin.

Frequency Compensation

Loop compensation determines the stability and transient performance, and is provided by the components tied to the V_C pin. Generally, a capacitor (C_C) and a resistor (R_C) in series to ground are used. Designing the compensation network is a bit complicated and the best values depend on the application. A practical approach is to start with one of the circuits in this data sheet that is similar to your application and tune the compensation network to optimize the performance. LTspice® simulations can help in this process. Stability should then be checked across all operating conditions, including load current, input voltage and temperature. The LT1375 data sheet contains a more thorough discussion of loop compensation and describes how to test the stability using a transient load.

Figure 5 shows an equivalent circuit for the LT8648S control loop. The error amplifier is a transconductance amplifier with finite output impedance. The power section, consisting of the modulator, power switches, and inductor, is modeled as a transconductance amplifier generating an output current proportional to the voltage at the V_C pin. Note that the output capacitor integrates this current, and that the capacitor on the V_C pin (C_C) integrates the error amplifier output current, resulting in two poles in the loop. A zero is required and comes from a resistor R_C in series with C_C. This simple model works well as long as the value of the inductor is not too high and the loop crossover frequency is much lower than the switching frequency. A phase lead capacitor (C_{PL}) across the feedback divider can be used to improve the transient response and is required to cancel the parasitic pole caused by the feedback node to ground capacitance.

Table 2 provides a guidance for the compensation values of several typical applications. Slight tweaks to these values may be required depending on the specific application. All applications were using R1 = 100k.

Table 2. Compensation Values

V_{OUT}	f_{SW}	C_C	R_C	C_{OUT}	C_{PL}
3.3V	400kHz	820pF	6.65k	47µF x3	33pF
3.3V	2MHz	330pF	10.2k	47µF	10pF
5V	400kHz	820pF	7.5k	47µF x3	33pF
5V	2MHz	330pF	11.8k	47µF	10pF

APPLICATIONS INFORMATION

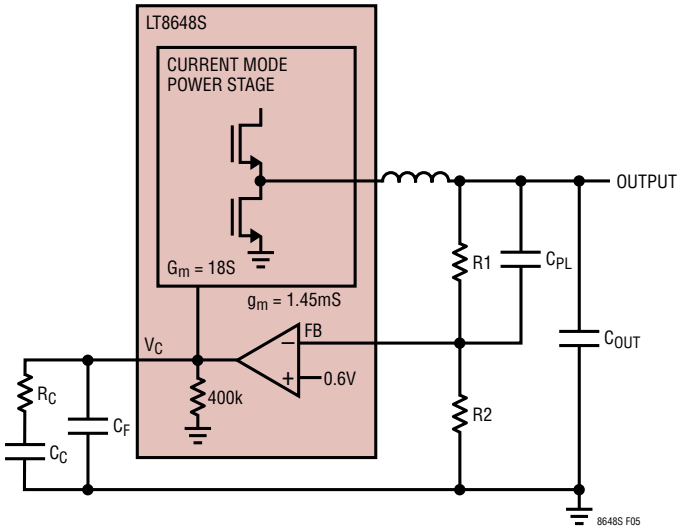

Figure 5. Model for Loop Response

Output Voltage Tracking and Soft-Start

The LT8648S allows the user to program its output voltage ramp rate by means of the SS pin. An internal 2µA pulls up the SS pin to $INTV_{CC}$. Putting an external capacitor on SS enables soft starting the output to prevent current surge on the input supply. During the soft-start ramp the output voltage will proportionally track the SS pin voltage. For output tracking applications, SS can be externally driven by another voltage source. From 0V to 1V, the SS voltage will override the internal 0.6V reference input to the error amplifier, thus regulating the FB pin voltage to a function of the SS pin. See plot in the Typical Performance Characteristics section. When SS is above 1V, tracking is disabled and the feedback voltage will regulate to the internal reference voltage. The SS pin may be left floating if the function is not needed.

An active pull-down circuit is connected to the SS pin which will discharge the external soft-start capacitor in the case of fault conditions and restart the ramp when the faults are cleared. Fault conditions that clear the soft-start capacitor are the EN/UV pin transitioning low, V_{IN} voltage falling too low, or thermal shutdown.

Paralleling

To increase the possible output current, two LT8648Ss can be connected in parallel to the same output. To do this, the V_C and FB pins are connected together, and each LT8648S's SW node is connected to the common output through its own inductor. The CLKOUT pin of one LT8648S should be connected to the SYNC/MODE pin of the second LT8648S to have both devices operate in the same mode. During FCM, spread spectrum, and synchronization modes, both devices will operate at the same frequency. Figure 6 shows an application where two LT8648Ss are paralleled to get one output capable of up to 30A.

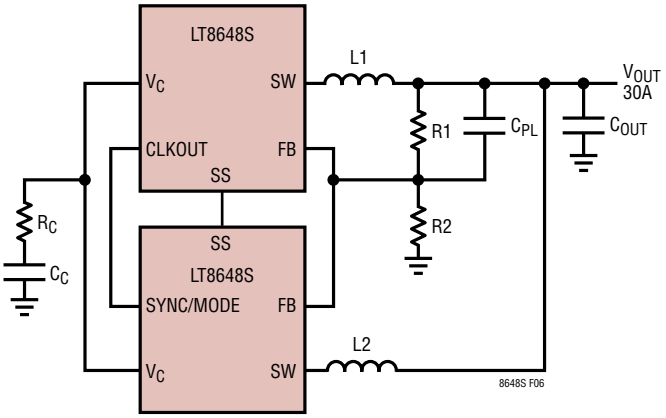

Figure 6. Paralleling Two LT8648Ss

Output Power Good

When the LT8648S's output voltage is within the ±7.75% window of the regulation point, the output voltage is considered good and the open-drain PG pin goes high impedance and is typically pulled high with an external resistor. Otherwise, the internal pull-down device will pull the PG pin low. To prevent glitching both the upper and lower thresholds include 0.2% of hysteresis. PG is valid when V_{IN} is above 3.4V.

The PG pin is also actively pulled low during several fault conditions: EN/UV pin is below 0.98V, $INTV_{CC}$ has fallen too low, V_{IN} is too low, or thermal shutdown.

Shorted and Reversed Input Protection

The LT8648S will tolerate a shorted output. Several features are used for protection during output short-circuit and brownout conditions. The first is the switching frequency will be folded back while the output is lower than the set point to maintain inductor current control.

APPLICATIONS INFORMATION

Second, the bottom switch current is monitored such that if inductor current is beyond safe levels switching of the top switch will be delayed until such time as the inductor current falls to safe levels.

Frequency foldback behavior depends on the state of the SYNC pin: If the SYNC pin is low the switching frequency will slow while the output voltage is lower than the programmed level. If the SYNC pin is connected to a clock source, floated or tied high, the LT8648S will stay at the programmed frequency without foldback and only slow switching if the inductor current exceeds safe levels.

There is another situation to consider in systems where the output will be held high when the input to the LT8648S is

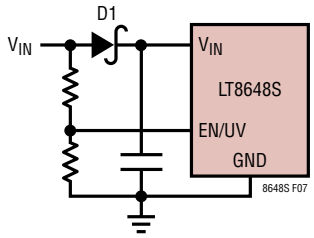

Figure 7. Reverse V_{IN} Protection

absent. This may occur in battery charging applications or in battery-backup systems where a battery or some other supply is diode ORed with the LT8648S's output. If the V_{IN} pin is allowed to float and the EN pin is held high (either by a logic signal or because it is tied to V_{IN}), then the LT8648S's internal circuitry will pull its quiescent current through its SW pin. This is acceptable if the system can tolerate several µA in this state. If the EN pin is grounded the SW pin current will drop to near 6µA. However, if the V_{IN} pin is grounded while the output is held high, regardless of EN, parasitic body diodes inside the LT8648S can pull current from the output through the SW pin and the V_{IN} pin. Figure 7 shows a connection of the V_{IN} and EN/UV pins that will allow the LT8648S to run only when the input voltage is present and that protects against a shorted or reversed input.

Thermal Considerations and Peak Output Current

For higher ambient temperatures, care should be taken in the layout of the PCB to ensure good heat sinking of the LT8648S. The ground pins on the bottom of the package should be soldered to a ground plane. This ground should be tied to large copper layers below with thermal vias; these layers will spread heat dissipated by the LT8648S. Placing additional vias can reduce thermal resistance further. The maximum load current should be derated as the ambient temperature approaches the maximum junction rating. Power dissipation within the LT8648S can be estimated by calculating the total power loss from an efficiency measurement and subtracting the inductor loss. The die temperature is calculated by multiplying the LT8648S power dissipation by the thermal resistance from junction to ambient.

The internal overtemperature protection monitors the junction temperature of the LT8648S. If the junction temperature reaches approximately 170°C, the LT8648S will stop switching and indicate a fault condition until the temperature drops about 5°C cooler.

Temperature rise of the LT8648S is worst when operating at high load, high V_{IN}, and high switching frequency. If the case temperature is too high for a given application, then either V_{IN}, switching frequency, or load current can be decreased to reduce the temperature to an acceptable level. Figure 8 shows examples of how case temperature rise can be managed by reducing V_{IN}, switching frequency, or load.

The LT8648S's top switch current limit decreases with higher duty cycle operation for slope compensation. This also limits the peak output current the LT8648S can deliver for a given application. See curve in Typical Performance Characteristics.

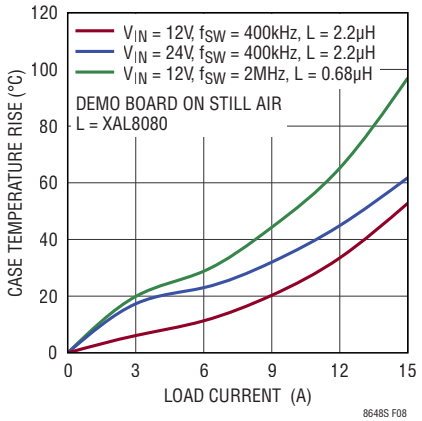

Figure 8. Case Temperature Rise

TYPICAL APPLICATIONS

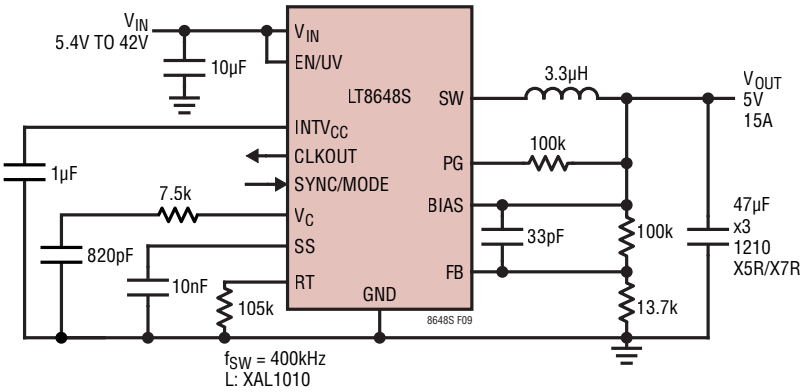

Figure 9. 400kHz 5V 15A Step-Down Converter with Soft-Start and Power Good

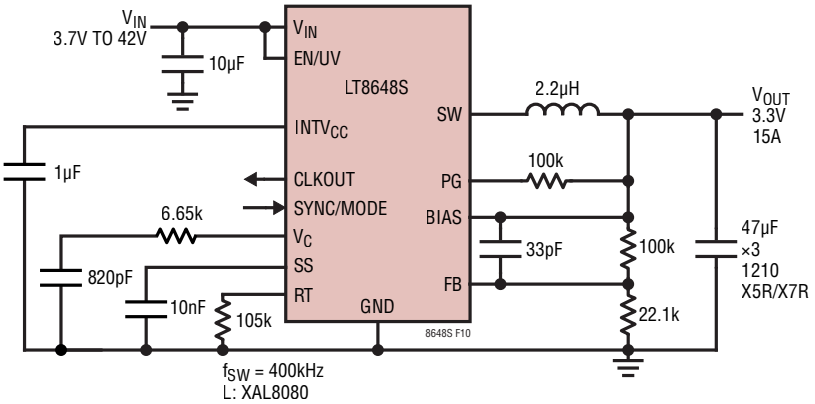

Figure 10. 400kHz 3.3V, 15A Step-Down Converter with Soft-Start and Power Good

TYPICAL APPLICATIONS

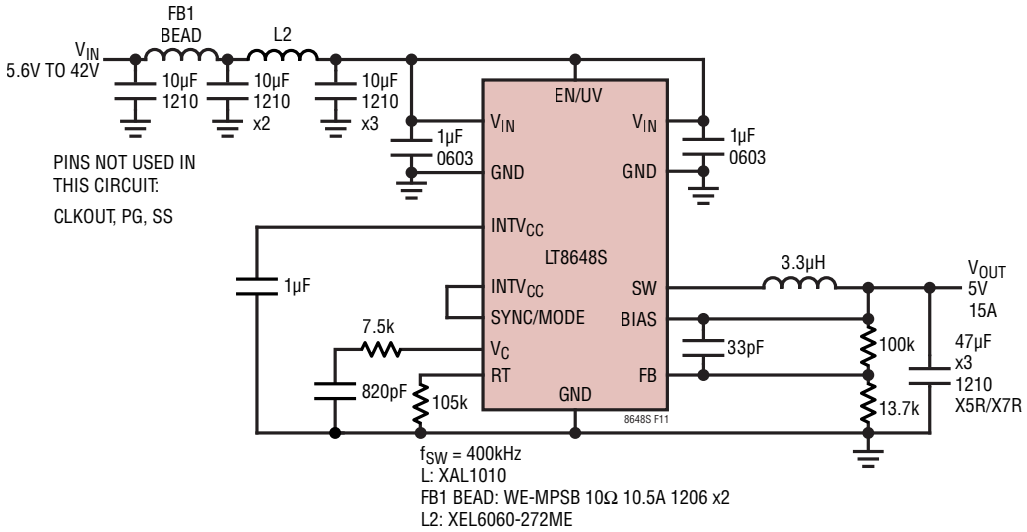

Figure 11. Ultralow EMI 5V, 15A Step-Down Converter with Spread Spectrum

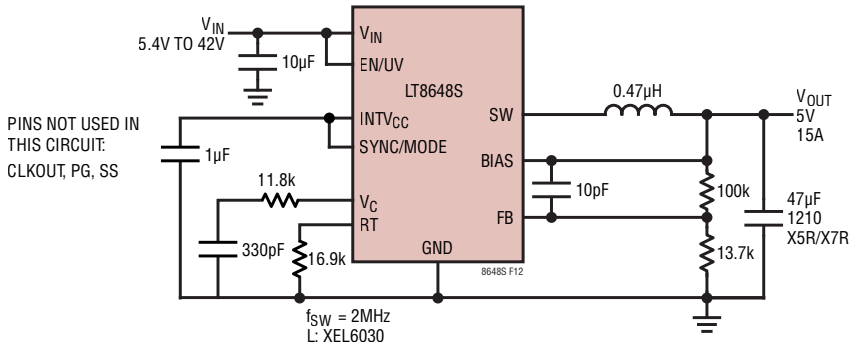

Figure 12. 2MHz 5V, 15A Step-Down Converter with Spread Spectrum

TYPICAL APPLICATIONS

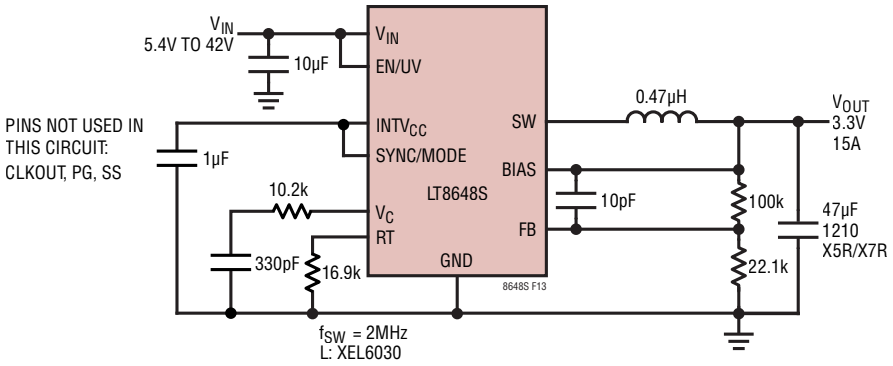

Figure 13. 2MHz 3.3V, 15A Step-Down Converter with Spread Spectrum

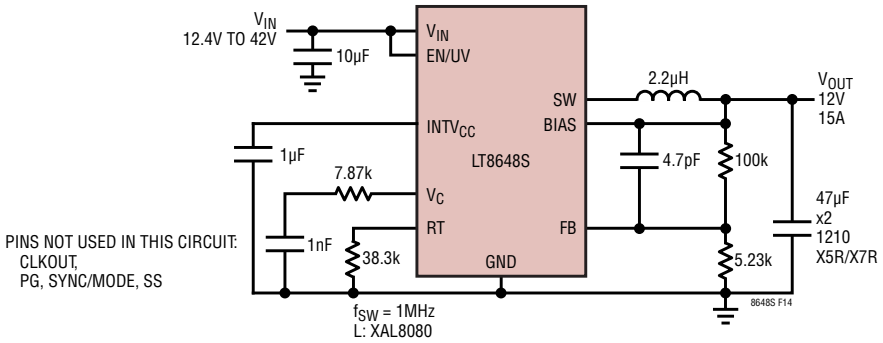

Figure 14. 1MHz 12V, 15A Step-Down Converter

PACKAGE DESCRIPTION

LQFN Package
36-Lead (7mm × 4mm × 0.94mm)
(Reference LTC DWG # 05-08-1604 Rev A)

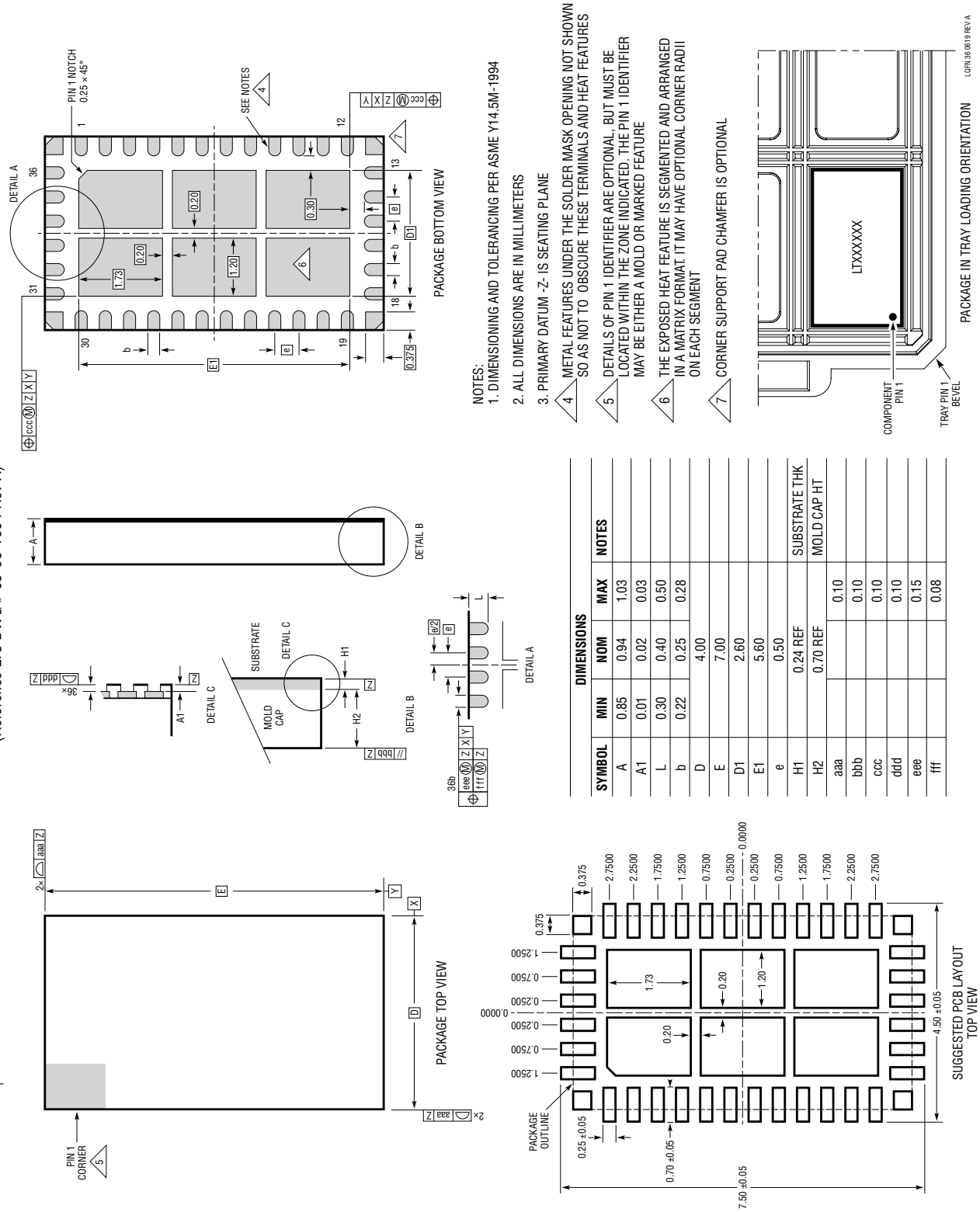

NOTES:
1. DIMENSIONING AND TOLERANCING PER ASME Y14.5M-1994
2. ALL DIMENSIONS ARE IN MILLIMETERS
3. PRIMARY DATUM -Z- IS SEATING PLANE
4. METAL FEATURES UNDER THE SOLDER MASK OPENING NOT SHOWN SO AS NOT TO OBSCURE THESE TERMINALS AND HEAT FEATURES
5. DETAILS OF PIN 1 IDENTIFIER ARE OPTIONAL, BUT MUST BE LOCATED WITHIN THE ZONE INDICATED. THE PIN 1 IDENTIFIER MAY BE EITHER A MOLD OR MARKED FEATURE
6. THE EXPOSED HEAT FEATURE IS SEGMENTED AND ARRANGED IN A MATRIX FORMAT. IT MAY HAVE OPTIONAL CORNER RADII ON EACH SEGMENT
7. CORNER SUPPORT PAD CHAMFER IS OPTIONAL

DIMENSIONS				
SYMBOL	MIN	NOM	MAX	NOTES
A	0.85	0.94	1.03	
A1	0.01	0.02	0.03	
L	0.30	0.40	0.50	
b	0.22	0.25	0.28	
D		4.00		
E		7.00		
D1		2.60		
E1		5.60		
e		0.50		
H1		0.24 REF		SUBSTRATE THK
H2		0.70 REF		MOLD CAP HT
aaa			0.10	
bbb			0.10	
ccc			0.10	
ddd			0.10	
eee			0.15	
fff			0.08	

Rev. 0

Information furnished by Analog Devices is believed to be accurate and reliable. However, no responsibility is assumed by Analog Devices for its use, nor for any infringements of patents or other rights of third parties that may result from its use. Specifications subject to change without notice. No license is granted by implication or otherwise under any patent or patent rights of Analog Devices.

TYPICAL APPLICATIONS

2MHz 1.8V, 15A Step-Down Converter

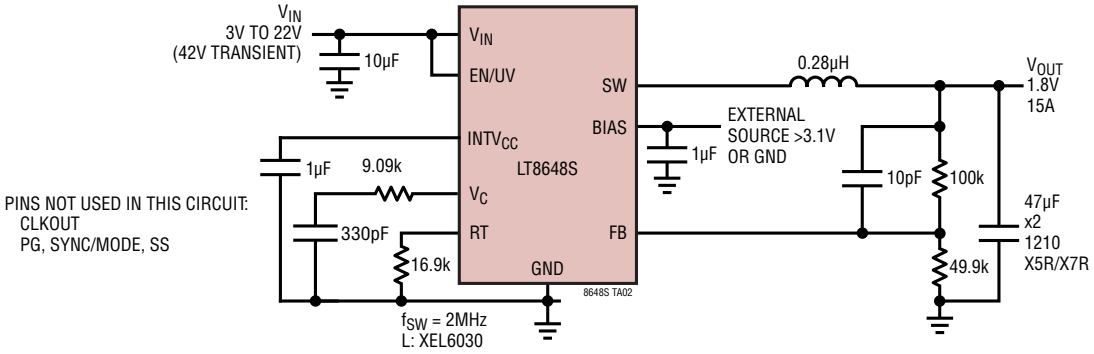

RELATED PARTS

PART	DESCRIPTION	COMMENTS
LT8640S/ LT8643S	42V, 6A Synchronous Step-Down Silent Switcher 2 with I_Q = 2.5µA	$V_{IN(MIN)}$ = 3.4V, $V_{IN(MAX)}$ = 42V, $V_{OUT(MIN)}$ = 0.97V, I_Q = 2.5µA, I_{SD} < 1µA, 4mm × 4mm LQFN-24
LT8640/ LT8640-1	42V, 5A, 96% Efficiency, 3MHz Synchronous MicroPower Step-Down DC/DC Converter with I_Q = 2.5µA	$V_{IN(MIN)}$ = 3.4V, $V_{IN(MAX)}$ = 42V, $V_{OUT(MIN)}$ = 0.99V, I_Q = 2.5µA, I_{SD} < 1µA, 3mm × 4mm QFN-18
LT8645S/ LT8646S	65V, 8A, Synchronous Step-Down Silent Switcher 2 with I_Q = 2.5µA	$V_{IN(MIN)}$ = 3.4V, $V_{IN(MAX)}$ = 65V, $V_{OUT(MIN)}$ = 0.97V, I_Q = 2.5µA, I_{SD} < 1µA, 4mm × 6mm LQFN-32
LT8641	65V, 3.5A, 95% Efficiency, 3MHz Synchronous MicroPower Step-Down DC/DC Converter with I_Q = 2.5µA	$V_{IN(MIN)}$ = 3V, $V_{IN(MAX)}$ = 65V, $V_{OUT(MIN)}$ = 0.81V, I_Q = 2.5µA, I_{SD} < 1µA, 3mm × 4mm QFN-18
LT8609/ LT8609A/ LT8609B	42V, 2A, 94% Efficiency, 2.2MHz Synchronous MicroPower Step-Down DC/DC Converter with I_Q = 2.5µA	$V_{IN(MIN)}$ = 3V, $V_{IN(MAX)}$ = 42V, $V_{OUT(MIN)}$ = 0.8V, I_Q = 2.5µA, I_{SD} < 1µA, MSOP-10E
LT8610A/ LT8610AB	42V, 3.5A, 96% Efficiency, 2.2MHz Synchronous MicroPower Step-Down DC/DC Converter with I_Q = 2.5µA	$V_{IN(MIN)}$ = 3.4V, $V_{IN(MAX)}$ = 42V, $V_{OUT(MIN)}$ = 0.97V, I_Q = 2.5µA, I_{SD} < 1µA, MSOP-16E
LT8610AC/ LT8610AC-1	42V, 3.5A, 96% Efficiency, 2.2MHz Synchronous MicroPower Step-Down DC/DC Converter with I_Q = 2.5µA	$V_{IN(MIN)}$ = 3V, $V_{IN(MAX)}$ = 42V, $V_{OUT(MIN)}$ = 0.8V, I_Q = 2.5µA, I_{SD} < 1µA, MSOP-16E
LT8610	42V, 2.5A, 96% Efficiency, 2.2MHz Synchronous MicroPower Step-Down DC/DC Converter with I_Q = 2.5µA	$V_{IN(MIN)}$ = 3.4V, $V_{IN(MAX)}$ = 42V, $V_{OUT(MIN)}$ = 0.97V, I_Q = 2.5µA, I_{SD} < 1µA, MSOP-16E
LT8611	42V, 2.5A, 96% Efficiency, 2.2MHz Synchronous MicroPower Step-Down DC/DC Converter with I_Q = 2.5µA and Input/Output Current Limit/Monitor	$V_{IN(MIN)}$ = 3.4V, $V_{IN(MAX)}$ = 42V, $V_{OUT(MIN)}$ = 0.97V, I_Q = 2.5µA, I_{SD} < 1µA, 3mm × 5mm QFN-24
LT8616	42V, Dual 2.5A + 1.5A, 95% Efficiency, 2.2MHz Synchronous MicroPower Step-Down DC/DC Converter with I_Q = 5µA	$V_{IN(MIN)}$ = 3.4V, $V_{IN(MAX)}$ = 42V, $V_{OUT(MIN)}$ = 0.8V, I_Q = 5µA, I_{SD} < 1µA, TSSOP-28E, 3mm × 6mm QFN-28
LT8620	65V, 2.5A, 94% Efficiency, 2.2MHz Synchronous MicroPower Step-Down DC/DC Converter with I_Q = 2.5µA	$V_{IN(MIN)}$ = 3.4V, $V_{IN(MAX)}$ = 65V, $V_{OUT(MIN)}$ = 0.97V, I_Q = 2.5µA, I_{SD} < 1µA, MSOP-16E, 3mm × 5mm QFN-24
LT8614	42V, 4A, 96% Efficiency, 2.2MHz Synchronous Silent Switcher Step-Down DC/DC Converter with I_Q = 2.5µA	$V_{IN(MIN)}$ = 3.4V, $V_{IN(MAX)}$ = 42V, $V_{OUT(MIN)}$ = 0.97V, I_Q = 2.5µA, I_{SD} < 1µA, 3mm × 4mm QFN18
LT8612	42V, 6A, 96% Efficiency, 2.2MHz Synchronous MicroPower Step-Down DC/DC Converter with I_Q = 2.5µA	$V_{IN(MIN)}$ = 3.4V, $V_{IN(MAX)}$ = 42V, $V_{OUT(MIN)}$ = 0.97V, I_Q = 3.0µA, I_{SD} < 1µA, 3mm × 6mm QFN-28
LT8613	42V, 6A, 96% Efficiency, 2.2MHz Synchronous MicroPower Step-Down DC/DC Converter with Current Limiting	$V_{IN(MIN)}$ = 3.4V, $V_{IN(MAX)}$ = 42V, $V_{OUT(MIN)}$ = 0.97V, I_Q = 3.0µA, I_{SD} < 1µA, 3mm × 6mm QFN-28
LT8602	42V, Quad Output (2.5A + 1.5A + 1.5A + 1.5A) 95% Efficiency, 2.2MHz Synchronous MicroPower Step-Down DC/DC Converter with I_Q = 25µA	$V_{IN(MIN)}$ = 3V, $V_{IN(MAX)}$ = 42V, $V_{OUT(MIN)}$ = 0.8V, I_Q = 2.5µA, I_{SD} < 1µA, 6mm × 6mm QFN-40

© ANALOG DEVICES, INC. 2020